OM-264 608A 2013–09

Processes

Stick (SMAW) Welding

TIG (GTAW) Welding

Description

Arc Welding Power Source

STR 500C

CE

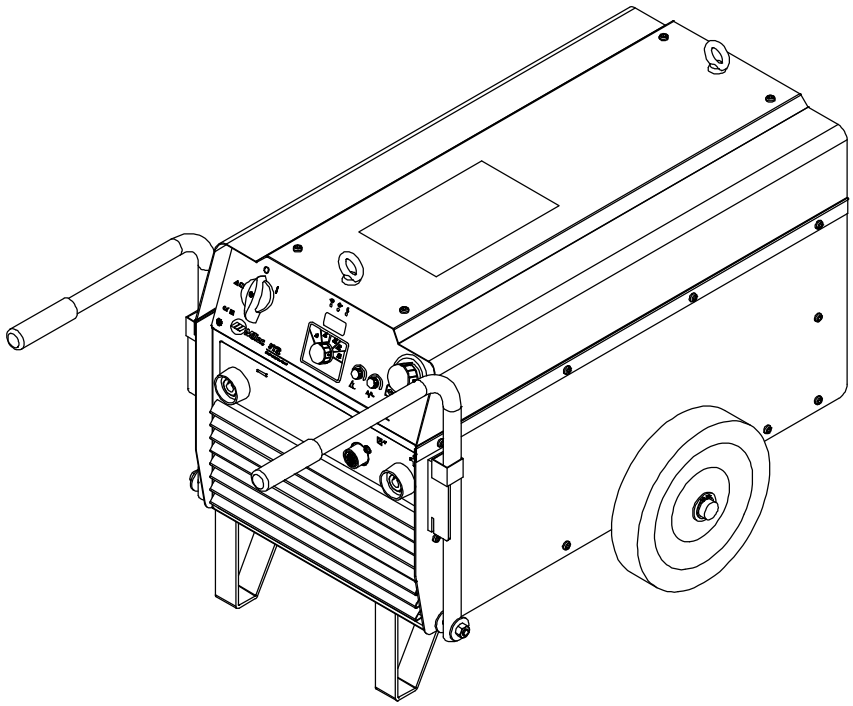

OWNER'S MANUAL

www.MillerWelds.com

From Miller to You

Thank you and *congratulations* on choosing Miller. Now you can get the job done and get it done right. We know you don't have time to do it any other way.

That's why when Niels Miller first started building arc welders in 1929, he made sure his products offered long-lasting value and superior quality. Like you, his customers couldn't afford anything less. Miller products had to be more than the best they could be. They had to be the best you could buy.

Today, the people that build and sell Miller products continue the tradition. They're just as committed to providing equipment and service that meets the high standards of quality and value established in 1929.

This Owner's Manual is designed to help you get the most out of your Miller products. Please take time to read the Safety precautions. They will help you protect yourself against potential hazards on the worksite. We've made installation and operation quick and easy. With Miller you can count on years of reliable service with proper maintenance. And if for some reason the unit needs repair, there's a Troubleshooting section that will help you figure out what the problem is. The parts list will then help you to decide which exact part you may need to fix the problem. Warranty and service information for your particular model are also provided.

Miller Electric manufactures a full line of welders and welding related equipment. For information on other quality Miller products, contact your local Miller distributor to receive the latest full line catalog or individual catalog sheets.

TRUE BLUE® WARRANTY

Working as hard as you do – every power source from Miller is backed by the most hassle-free warranty in the business.

Miller®

TABLE OF CONTENTS

SECTION 1 − SAFETY PRECAUTIONS - READ BEFORE USING 1
1-1. Symbol Usage 1
1-2. Arc Welding Hazards 1
1-3. Additional Symbols For Installation, Operation, And Maintenance 3
1-4. California Proposition 65 Warnings 4
1-5. Principal Safety Standards 4
1-6. EMF Information 4
SECTION 2 − DEFINITIONS 5
2-1. Additional Safety Symbols And Definitions 5
2-2. Miscellaneous Symbols And Definitions 7
SECTION 3 − INSTALLATION 8
3-1. Serial Number And Rating Label Location 8
3-2. Specifications 8
3-3. Environmental Specifications 8
3-4. Duty Cycle and Overheating 9
3-5. Volt-Ampere Curve 10
3-6. Selecting A Location 11
3-7. Tipping 11
3-8. Weld Output Terminals and Selecting Cable Sizes 12
3-9. Remote Receptacle Information 13
3-10. Typical Connections For Stick (SMAW) Welding 14
3-11. Typical Connections For TIG (GTAW) Welding 14
3-12. Electrical Service Guide 15
3-13. Connecting Input Power 16
SECTION 4 − OPERATION 18
4-1. Front Panel Controls 18
4-2. Rear Panel Controls 19
4-3. Welding Process Selection For STR 500C 20
4-4. Hot Start And Arc Force (DIG) Controls 21
4-5. Output Control Selector 21
4-6. Amperage Control 22
4-7. Stick Start Procedure − Scratch Start Technique 22
4-8. Scratch Start TIG 23
4-9. Lift-Arc Start Procedures 23
SECTION 5 − MAINTENANCE AND TROUBLESHOOTING 24
5-1. Routine Maintenance 24
5-2. Help Displays 24
5-3. Troubleshooting 24
SECTION 6 − ELECTRICAL DIAGRAMS 26
SECTION 7 − PARTS LIST 28
WARRANTY

DECLARATION OF CONFORMITY

for European Community (CE marked) products.

ITW Welding Products Italy S.r.l Via Privata Iseo 6/E, 20098 San Giuliano M.se, (MI) Italy declares that the product(s) identified in this declaration conform to the essential requirements and provisions of the stated Council Directive(s) and Standard(s).

Product/Apparatus Identification:

Product	Stock Number
STR 500 C, 380VAC	059016020

Council Directives:

·2006/95/EC Low Voltage

·2004/108/EC Electromagnetic Compatibility

·2011/65/EU Restriction of the use of certain hazardous substances in electrical and electronic equipment

Standards:

·IEC 60974-1 Arc Welding Equipment - Welding Power Sources: edition 3, 2005-07.

·IEC 60974-10 Arc Welding Equipment - Electromagnetic Compatibility Requirements: edition 2.0, 2007-08.

·EN 50445:2008 Product family standard to demonstrate compliance of equipment for resistance welding, arc welding and allied processes with the basic restrictions related to human exposure to electromagnetic fields (0Hz-300Hz)

EU Signatory:

July 19th, 2013

Massimigliano Lavarini

Date of Declaration

PRODUCT DESIGN COMPLIANCE SR. ELECTRONIC ENGINEER

956 172 125

SECTION 1 − SAFETY PRECAUTIONS - READ BEFORE USING

Protect yourself and others from injury — read, follow, and save these important safety precautions and operating instructions.

1-1. Symbol Usage

DANGER! − Indicates a hazardous situation which, if not avoided, will result in death or serious injury. The possible hazards are shown in the adjoining symbols or explained in the text.

Indicates a hazardous situation which, if not avoided, could result in death or serious injury. The possible hazards are shown in the adjoining symbols or explained in the text.

NOTICE *− Indicates statements not related to personal injury.*

☞ *Indicates special instructions.*

This group of symbols means Warning! Watch Out! ELECTRIC SHOCK, MOVING PARTS, and HOT PARTS hazards. Consult symbols and related instructions below for necessary actions to avoid the hazards.

1-2. Arc Welding Hazards

The symbols shown below are used throughout this manual to call attention to and identify possible hazards. When you see the symbol, watch out, and follow the related instructions to avoid the hazard. The safety information given below is only a summary of the more complete safety information found in the Safety Standards listed in Section 1-5. Read and follow all Safety Standards.

Only qualified persons should install, operate, maintain, and repair this unit.

During operation, keep everybody, especially children, away.

ELECTRIC SHOCK can kill.

Touching live electrical parts can cause fatal shocks or severe burns. The electrode and work circuit is electrically live whenever the output is on. The input power circuit and machine internal circuits are also live when power is on. In semiautomatic or automatic wire welding, the wire, wire reel, drive roll housing, and all metal parts touching the welding wire are electrically live. Incorrectly installed or improperly grounded equipment is a hazard.

- Do not touch live electrical parts.
- Wear dry, hole-free insulating gloves and body protection.
- Insulate yourself from work and ground using dry insulating mats or covers big enough to prevent any physical contact with the work or ground.
- Do not use AC output in damp areas, if movement is confined, or if there is a danger of falling.
- Use AC output ONLY if required for the welding process.
- If AC output is required, use remote output control if present on unit.
- Additional safety precautions are required when any of the following electrically hazardous conditions are present: in damp locations or while wearing wet clothing; on metal structures such as floors, gratings, or scaffolds; when in cramped positions such as sitting, kneeling, or lying; or when there is a high risk of unavoidable or accidental contact with the workpiece or ground. For these conditions, use the following equipment in order presented: 1) a semiautomatic DC constant voltage (wire) welder, 2) a DC manual (stick) welder, or 3) an AC welder with reduced open-circuit voltage. In most situations, use of a DC, constant voltage wire welder is recommended. And, do not work alone!
- Disconnect input power or stop engine before installing or servicing this equipment. Lockout/tagout input power according to OSHA 29 CFR 1910.147 (see Safety Standards).
- Properly install, ground, and operate this equipment according to its Owner's Manual and national, state, and local codes.
- Always verify the supply ground − check and be sure that input power cord ground wire is properly connected to ground terminal in disconnect box or that cord plug is connected to a properly grounded receptacle outlet.
- When making input connections, attach proper grounding conductor first − double-check connections.
- Keep cords dry, free of oil and grease, and protected from hot metal and sparks.
- Frequently inspect input power cord for damage or bare wiring − replace cord immediately if damaged − bare wiring can kill.
- Turn off all equipment when not in use.
- Do not use worn, damaged, undersized, or poorly spliced cables.
- Do not drape cables over your body.
- If earth grounding of the workpiece is required, ground it directly with a separate cable.
- Do not touch electrode if you are in contact with the work, ground, or another electrode from a different machine.
- Do not touch electrode holders connected to two welding machines at the same time since double open-circuit voltage will be present.
- Use only well-maintained equipment. Repair or replace damaged parts at once. Maintain unit according to manual.
- Wear a safety harness if working above floor level.
- Keep all panels and covers securely in place.
- Clamp work cable with good metal-to-metal contact to workpiece or worktable as near the weld as practical.
- Insulate work clamp when not connected to workpiece to prevent contact with any metal object.
- Do not connect more than one electrode or work cable to any single weld output terminal. Disconnect cable for process not in use.

SIGNIFICANT DC VOLTAGE exists in inverter welding power sources AFTER removal of input power.

- Turn Off inverter, disconnect input power, and discharge input capacitors according to instructions in Maintenance Section before touching any parts.

HOT PARTS can burn.

- Do not touch hot parts bare handed.
- Allow cooling period before working on equipment.
- To handle hot parts, use proper tools and/or wear heavy, insulated welding gloves and clothing to prevent burns.

FUMES AND GASES can be hazardous.

Welding produces fumes and gases. Breathing these fumes and gases can be hazardous to your health.

- Keep your head out of the fumes. Do not breathe the fumes.
- If inside, ventilate the area and/or use local forced ventilation at the arc to remove welding fumes and gases.
- If ventilation is poor, wear an approved air-supplied respirator.
- Read and understand the Material Safety Data Sheets (MSDSs) and the manufacturer's instructions for metals, consumables, coatings, cleaners, and degreasers.
- Work in a confined space only if it is well ventilated, or while wearing an air-supplied respirator. Always have a trained watchperson nearby. Welding fumes and gases can displace air and lower the oxygen level causing injury or death. Be sure the breathing air is safe.
- Do not weld in locations near degreasing, cleaning, or spraying operations. The heat and rays of the arc can react with vapors to form highly toxic and irritating gases.
- Do not weld on coated metals, such as galvanized, lead, or cadmium plated steel, unless the coating is removed from the weld area, the area is well ventilated, and while wearing an air-supplied respirator. The coatings and any metals containing these elements can give off toxic fumes if welded.

ARC RAYS can burn eyes and skin.

Arc rays from the welding process produce intense visible and invisible (ultraviolet and infrared) rays that can burn eyes and skin. Sparks fly off from the weld.

- Wear an approved welding helmet fitted with a proper shade of filter lenses to protect your face and eyes from arc rays and sparks when welding or watching (see ANSI Z49.1 and Z87.1 listed in Safety Standards).
- Wear approved safety glasses with side shields under your helmet.
- Use protective screens or barriers to protect others from flash, glare and sparks; warn others not to watch the arc.
- Wear protective clothing made from durable, flame-resistant material (leather, heavy cotton, or wool) and foot protection.

WELDING can cause fire or explosion.

Welding on closed containers, such as tanks, drums, or pipes, can cause them to blow up. Sparks can fly off from the welding arc. The flying sparks, hot workpiece, and hot equipment can cause fires and burns. Accidental contact of electrode to metal objects can cause sparks, explosion, overheating, or fire. Check and be sure the area is safe before doing any welding.

- Remove all flammables within 35 ft (10.7 m) of the welding arc. If this is not possible, tightly cover them with approved covers.
- Do not weld where flying sparks can strike flammable material.
- Protect yourself and others from flying sparks and hot metal.
- Be alert that welding sparks and hot materials from welding can easily go through small cracks and openings to adjacent areas.
- Watch for fire, and keep a fire extinguisher nearby.
- Be aware that welding on a ceiling, floor, bulkhead, or partition can cause fire on the hidden side.
- Do not weld on containers that have held combustibles, or on closed containers such as tanks, drums, or pipes unless they are properly prepared according to AWS F4.1 and AWS A6.0 (see Safety Standards).
- Do not weld where the atmosphere may contain flammable dust, gas, or liquid vapors (such as gasoline).
- Connect work cable to the work as close to the welding area as practical to prevent welding current from traveling long, possibly unknown paths and causing electric shock, sparks, and fire hazards.
- Do not use welder to thaw frozen pipes.
- Remove stick electrode from holder or cut off welding wire at contact tip when not in use.
- Wear oil-free protective garments such as leather gloves, heavy shirt, cuffless trousers, high shoes, and a cap.
- Remove any combustibles, such as a butane lighter or matches, from your person before doing any welding.
- After completion of work, inspect area to ensure it is free of sparks, glowing embers, and flames.
- Use only correct fuses or circuit breakers. Do not oversize or bypass them.
- Follow requirements in OSHA 1910.252 (a) (2) (iv) and NFPA 51B for hot work and have a fire watcher and extinguisher nearby.

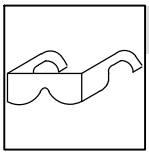

FLYING METAL or DIRT can injure eyes.

- Welding, chipping, wire brushing, and grinding cause sparks and flying metal. As welds cool, they can throw off slag.
- Wear approved safety glasses with side shields even under your welding helmet.

BUILDUP OF GAS can injure or kill.

- Shut off compressed gas supply when not in use.
- Always ventilate confined spaces or use approved air-supplied respirator.

ELECTRIC AND MAGNETIC FIELDS (EMF) can affect Implanted Medical Devices.

- Wearers of Pacemakers and other Implanted Medical Devices should keep away.
- Implanted Medical Device wearers should consult their doctor and the device manufacturer before going near arc welding, spot welding, gouging, plasma arc cutting, or induction heating operations.

NOISE can damage hearing.

Noise from some processes or equipment can damage hearing.

- Wear approved ear protection if noise level is high.

CYLINDERS can explode if damaged.

Compressed gas cylinders contain gas under high pressure. If damaged, a cylinder can explode. Since gas cylinders are normally part of the welding process, be sure to treat them carefully.

- Protect compressed gas cylinders from excessive heat, mechanical shocks, physical damage, slag, open flames, sparks, and arcs.
- Install cylinders in an upright position by securing to a stationary support or cylinder rack to prevent falling or tipping.
- Keep cylinders away from any welding or other electrical circuits.
- Never drape a welding torch over a gas cylinder.
- Never allow a welding electrode to touch any cylinder.
- Never weld on a pressurized cylinder − explosion will result.
- Use only correct compressed gas cylinders, regulators, hoses, and fittings designed for the specific application; maintain them and associated parts in good condition.
- Turn face away from valve outlet when opening cylinder valve.
- Keep protective cap in place over valve except when cylinder is in use or connected for use.
- Use the right equipment, correct procedures, and sufficient number of persons to lift and move cylinders.
- Read and follow instructions on compressed gas cylinders, associated equipment, and Compressed Gas Association (CGA) publication P-1 listed in Safety Standards.

1-3. Additional Symbols For Installation, Operation, And Maintenance

FIRE OR EXPLOSION hazard.

- Do not install or place unit on, over, or near combustible surfaces.
- Do not install unit near flammables.
- Do not overload building wiring − be sure power supply system is properly sized, rated, and protected to handle this unit.

FALLING EQUIPMENT can injure.

- Use lifting eye to lift unit only, NOT running gear, gas cylinders, or any other accessories.
- Use equipment of adequate capacity to lift and support unit.
- If using lift forks to move unit, be sure forks are long enough to extend beyond opposite side of unit.
- Keep equipment (cables and cords) away from moving vehicles when working from an aerial location.
- Follow the guidelines in the Applications Manual for the Revised NIOSH Lifting Equation (Publication No. 94−110) when manually lifting heavy parts or equipment.

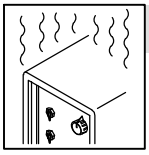

OVERUSE can cause OVERHEATING

- Allow cooling period; follow rated duty cycle.
- Reduce current or reduce duty cycle before starting to weld again.
- Do not block or filter airflow to unit.

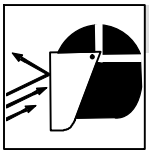

FLYING SPARKS can injure.

- Wear a face shield to protect eyes and face.
- Shape tungsten electrode only on grinder with proper guards in a safe location wearing proper face, hand, and body protection.
- Sparks can cause fires — keep flammables away.

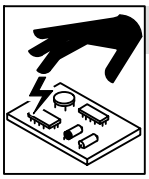

STATIC (ESD) can damage PC boards.

- Put on grounded wrist strap BEFORE handling boards or parts.
- Use proper static-proof bags and boxes to store, move, or ship PC boards.

MOVING PARTS can injure.

- Keep away from moving parts.
- Keep away from pinch points such as drive rolls.

WELDING WIRE can injure.

- Do not press gun trigger until instructed to do so.
- Do not point gun toward any part of the body, other people, or any metal when threading welding wire.

BATTERY EXPLOSION can injure.

- Do not use welder to charge batteries or jump start vehicles unless it has a battery charging feature designed for this purpose.

MOVING PARTS can injure.

- Keep away from moving parts such as fans.
- Keep all doors, panels, covers, and guards closed and securely in place.
- Have only qualified persons remove doors, panels, covers, or guards for maintenance and troubleshooting as necessary.
- Reinstall doors, panels, covers, or guards when maintenance is finished and before reconnecting input power.

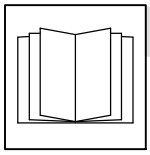

READ INSTRUCTIONS.

- Read and follow all labels and the Owner's Manual carefully before installing, operating, or servicing unit. Read the safety information at the beginning of the manual and in each section.
- Use only genuine replacement parts from the manufacturer.
- Perform maintenance and service according to the Owner's Manuals, industry standards, and national, state, and local codes.

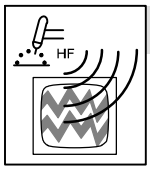

H.F. RADIATION can cause interference.

- High-frequency (H.F.) can interfere with radio navigation, safety services, computers, and communications equipment.
- Have only qualified persons familiar with electronic equipment perform this installation.
- The user is responsible for having a qualified electrician promptly correct any interference problem resulting from the installation.
- If notified by the FCC about interference, stop using the equipment at once.
- Have the installation regularly checked and maintained.
- Keep high-frequency source doors and panels tightly shut, keep spark gaps at correct setting, and use grounding and shielding to minimize the possibility of interference.

ARC WELDING can cause interference.

- Electromagnetic energy can interfere with sensitive electronic equipment such as computers and computer-driven equipment such as robots.
- Be sure all equipment in the welding area is electromagnetically compatible.
- To reduce possible interference, keep weld cables as short as possible, close together, and down low, such as on the floor.
- Locate welding operation 100 meters from any sensitive electronic equipment.
- Be sure this welding machine is installed and grounded according to this manual.
- If interference still occurs, the user must take extra measures such as moving the welding machine, using shielded cables, using line filters, or shielding the work area.

1-4. California Proposition 65 Warnings

Welding or cutting equipment produces fumes or gases which contain chemicals known to the State of California to cause birth defects and, in some cases, cancer. (California Health & Safety Code Section 25249.5 et seq.)

This product contains chemicals, including lead, known to the state of California to cause cancer, birth defects, or other reproductive harm. *Wash hands after use.*

1-5. Principal Safety Standards

Safety in Welding, Cutting, and Allied Processes, ANSI Standard Z49.1, is available as a free download from the American Welding Society at http://www.aws.org or purchased from Global Engineering Documents (phone: 1-877-413-5184, website: www.global.ihs.com).

Safe Practices for the Preparation of Containers and Piping for Welding and Cutting, American Welding Society Standard AWS F4.1, from Global Engineering Documents (phone: 1-877-413-5184, website: www.global.ihs.com).

Safe Practices for Welding and Cutting Containers that have Held Combustibles, American Welding Society Standard AWS A6.0, from Global Engineering Documents (phone: 1-877-413-5184, website: www.global.ihs.com).

National Electrical Code, NFPA Standard 70, from National Fire Protection Association, Quincy, MA 02269 (phone: 1-800-344-3555, website: www.nfpa.org and www. sparky.org).

Safe Handling of Compressed Gases in Cylinders, CGA Pamphlet P-1, from Compressed Gas Association, 14501 George Carter Way, Suite 103, Chantilly, VA 20151 (phone: 703-788-2700, website:www.cga-net.com).

Safety in Welding, Cutting, and Allied Processes, CSA Standard W117.2, from Canadian Standards Association, Standards Sales, 5060 Spectrum Way, Suite 100, Ontario, Canada L4W 5NS (phone: 800-463-6727, website: www.csa-international.org).

Safe Practice For Occupational And Educational Eye And Face Protection, ANSI Standard Z87.1, from American National Standards Institute, 25 West 43rd Street, New York, NY 10036 (phone: 212-642-4900, website: www.ansi.org).

Standard for Fire Prevention During Welding, Cutting, and Other Hot Work, NFPA Standard 51B, from National Fire Protection Association, Quincy, MA 02269 (phone: 1-800-344-3555, website: www.nfpa.org.

OSHA, Occupational Safety and Health Standards for General Industry, Title 29, Code of Federal Regulations (CFR), Part 1910, Subpart Q, and Part 1926, Subpart J, from U.S. Government Printing Office, Superintendent of Documents, P.O. Box 371954, Pittsburgh, PA 15250-7954 (phone: 1-866-512-1800) (there are 10 OSHA Regional Offices—phone for Region 5, Chicago, is 312-353-2220, website: www.osha.gov).

Applications Manual for the Revised NIOSH Lifting Equation, The National Institute for Occupational Safety and Health (NIOSH), 1600 Clifton Rd, Atlanta, GA 30333 (phone: 1-800-232-4636, website: www.cdc.gov/NIOSH).

1-6. EMF Information

Electric current flowing through any conductor causes localized electric and magnetic fields (EMF). Welding current creates an EMF field around the welding circuit and welding equipment. EMF fields may interfere with some medical implants, e.g. pacemakers. Protective measures for persons wearing medical implants have to be taken. For example, restrict access for passers−by or conduct individual risk assessment for welders. All welders should use the following procedures in order to minimize exposure to EMF fields from the welding circuit:

1. Keep cables close together by twisting or taping them, or using a cable cover.
2. Do not place your body between welding cables. Arrange cables to one side and away from the operator.
3. Do not coil or drape cables around your body.
4. Keep head and trunk as far away from the equipment in the welding circuit as possible.
5. Connect work clamp to workpiece as close to the weld as possible.
6. Do not work next to, sit or lean on the welding power source.
7. Do not weld whilst carrying the welding power source or wire feeder.

About Implanted Medical Devices:

Implanted Medical Device wearers should consult their doctor and the device manufacturer before performing or going near arc welding, spot welding, gouging, plasma arc cutting, or induction heating operations. If cleared by your doctor, then following the above procedures is recommended.

SECTION 2 – DEFINITIONS

2-1. Additional Safety Symbols And Definitions

☞ *Some symbols are found only on CE products.*

	Warning! Watch Out! There are possible hazards as shown by the symbols. Safe1 2012–05
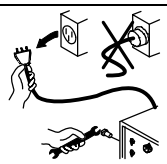	Disconnect input plug or power before working on machine. Safe5 2012–05
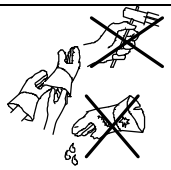	Wear dry insulating gloves. Do not touch electrode with bare hand. Do not wear wet or damaged gloves. Safe2 2012–05
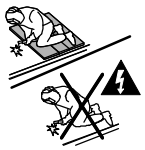	Protect yourself from electric shock by insulating yourself from work and ground. Safe3 2012–05
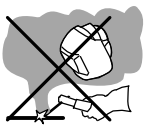	Keep your head out of the fumes. Safe6 2012–05
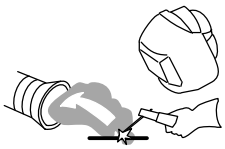	Use forced ventilation or local exhaust to remove the fumes. Safe8 2012–05
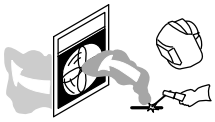	Use ventilating fan to remove fumes. Safe10 2012–05
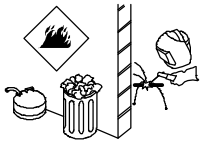	Keep flammables away from welding. Do not weld near flammables. Safe12 2012–05
	Welding sparks can cause fires. Have a fire extinguisher nearby, and have a watchperson ready to use it. Safe14 2012–05
	Do not weld on drums or any closed containers. Safe16 2012–05

	Do not remove or paint over (cover) the label. Safe20 2012−05
	Do not discard product (where applicable) with general waste. Reuse or recycle Waste Electrical and Electronic Equipment (WEEE) by disposing at a designated collection facility. Contact your local recycling office or your local distributor for further information. Safe37 2012−05
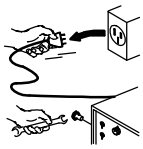	Disconnect input plug or power before working on machine. Safe30 2012−05
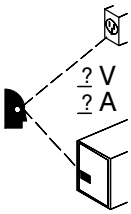	Consult rating label for input power requirements. Safe34 2012−05
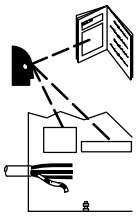	Read Owner's Manual and inside labels for connection points and procedures. Safe67 2012−06
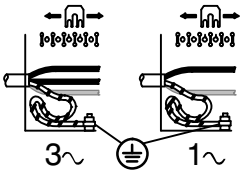	Move jumper links as shown on inside label to match input voltage at job site. Include extra length in grounding conductor and connect grounding conductor first. Connect line input conductors as shown on inside label. Double-check all connections, jumper link positions, and input voltage before applying power. Safe49 2012−05
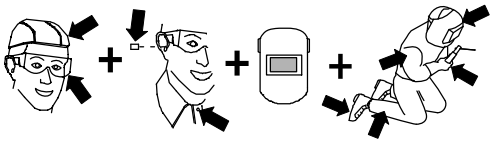	Wear hat and safety glasses. Use ear protection and button shirt collar. Use welding helmet with correct shade of filter. Wear complete body protection. Safe38 2012−05
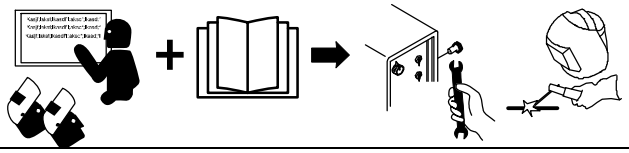	Become trained and read the instructions before working on the machine or welding. Safe40 2012−05

2-2. Miscellaneous Symbols And Definitions

A	Amperes	—	Negative Weld Output Terminal	+	Positive Weld Output Terminal	⏚	Protective Earth (Ground)
	Output		Supplementary Protector	O	Off	I	On
V	Volts		Shielded Metal Arc Welding (SMAW)	→V	Input		Remote
	Constant Current (CC)	X	Duty Cycle	I_1	Rated Supply Current	I_2	Rated Welding Current
U_0	Rated No-Load Voltage (Average)	U_1	Rated Supply Voltage	U_2	Load voltage		Line Connection
	Scratch Start TIG		Stick Gauging		Current Increase/ Decrease	3~	Three Phase Transformer Rectifier
	Fuse	IP	Internal Protection Rating	S_1	KVA		Lift-Arc Start (GTAW)
	Gas Tungsten Arc Welding (GTAW)	S	Suitable For Areas Of Increased Shock Hazard		Panel/Local	A	Hot Start
	Arc Force (DIG)	I_{1max}	Rated Maximum Supply Current	I_{1eff}	Maximum Effective Supply Current		

Notes

SECTION 3 − INSTALLATION

3-1. Serial Number And Rating Label Location

The serial number and rating information for this product is located on the back . Use rating label to determine input power requirements and/or rated output. For future reference, write serial number in space provided on back cover of this manual.

3-2. Specifications

Model	Rated Welding Output	Ampere Range DC	Max Open-Circuit Voltage DC	Amperes Input at Rated Load Output, 50/60 Hz, Three-Phase	KVA/KW	Weight Net/Ship	Dimensions (mm) L x W x H
				380 V			
500C	500 A @ 40 Volts DC, 35% Duty Cycle	20−500 A	72 V	55 A	36.2/28.8	174/191 kg	1120 x 620 x 730

3-3. Environmental Specifications

A. IP Rating

IP Rating	Operating Temperature Range	Storage Temperature Range
IP22S This equipment is designed for indoor use and is not intended to be used or stored outside.	-10 to 40 °C (14 to 104°F)	20 to 25 °C (68 to 77°F)

B. Information On Electromagnetic Fields (EMF)

This equipment shall not be used by the general public as the EMF limits for the general public might be exceeded during welding.

This equipment is built in accordance with EN 60974−1 and is intended to be used only in an occupational environment (where the general public access is prohibited or regulated in such a way as to be similar to occupational use) by an expert or an instructed person.

Wire feeders and ancillary equipment (such as torches, liquid cooling systems and arc striking and stabilizing devices) as part of the welding circuit may not be a major contributor to the EMF. See the Owner's Manuals for all components of the welding circuit for additional EMF exposure information.

- The EMF assessment on this equipment was conducted at 0.5 meter.
- At a distance of 1 meter the EMF exposure values were less than 20% of the permissible values.

ce-emf 1 2010-10

C. Information On Electromagnetic Compatibility (EMC)

This Class A equipment is not intended for use in residential locations where the electrical power is provided by the public low−voltage supply system. There can be potential difficulties in ensuring electromagnetic compatibility in those locations, due to conducted as well as radiated disturbances.

This equipment complies with IEC 61000−3−12 provided that the short−circuit power Ssc is greater than or equal to 5,298,037,355 at the interface point between the user's supply and the public system. It is the responsibility of the installer or user of the equipment to ensure, by consultation with the distribution network operator if necessary, that the equipment is connected only to a supply with a short−circuit power Ssc greater than or equal to 5,298,037,355.

ce-emc 1 2011-09

3-4. Duty Cycle and Overheating

Duty Cycle is percentage of 10 minutes that unit can weld at rated load without overheating.

If unit overheats, thermostat(s) opens, output stops, and cooling fan runs. Wait fifteen minutes for unit to cool. Reduce amperage or duty cycle before welding.

NOTICE *− Exceeding duty cycle can damage unit and void warranty.*

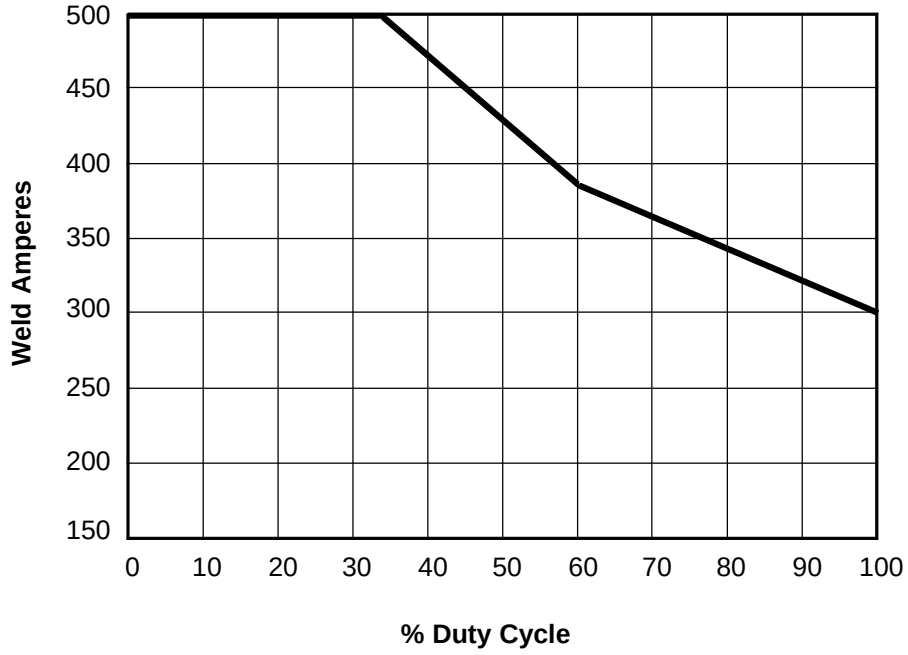

35% Duty Cycle At 500 A

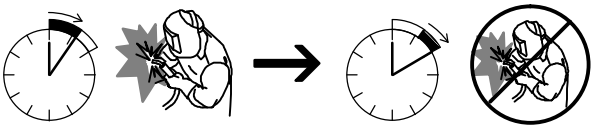

3.5 Minutes Welding — 6.5 Minutes Resting

60%Duty Cycle At 380 A

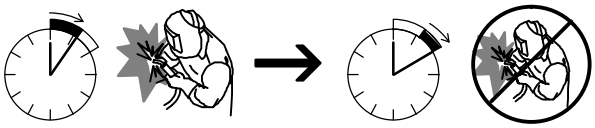

6 Minutes Welding — 4 Minutes Resting

100% Duty Cycle At 300 A

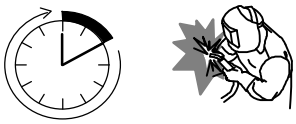

Continuous Welding

Overheating

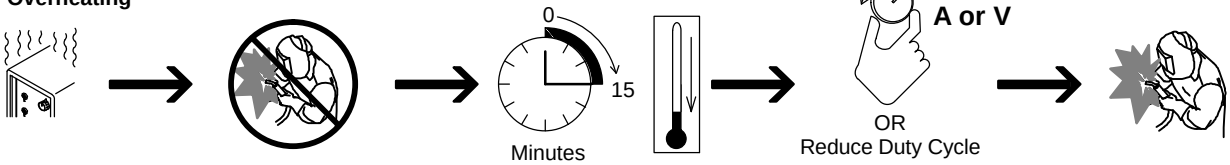

3-5. Volt-Ampere Curve

The volt-ampere curves show the normal minimum and maximum voltage and amperage output capabilities of the unit.

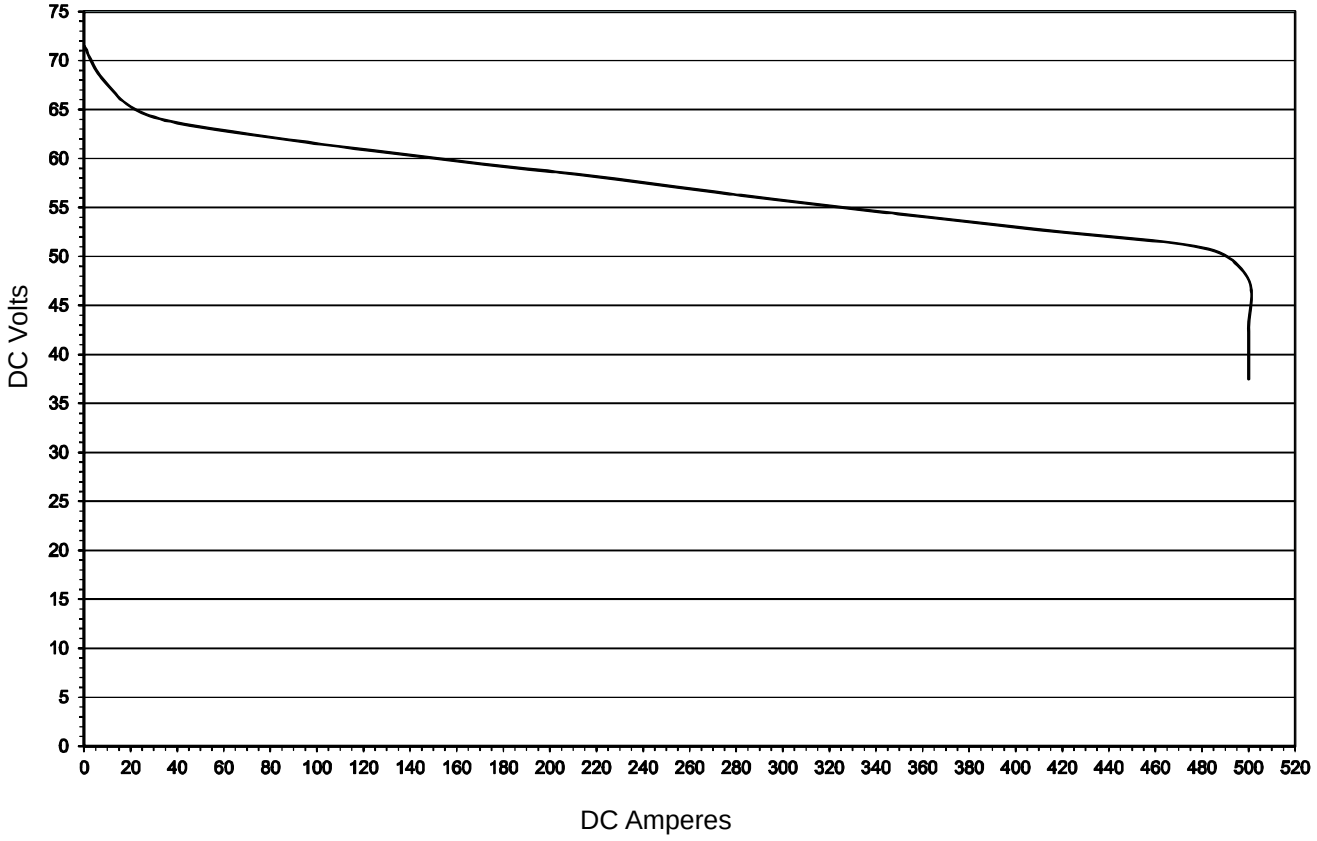

3-6. Selecting A Location

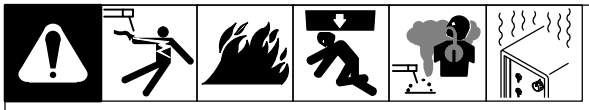

Movement

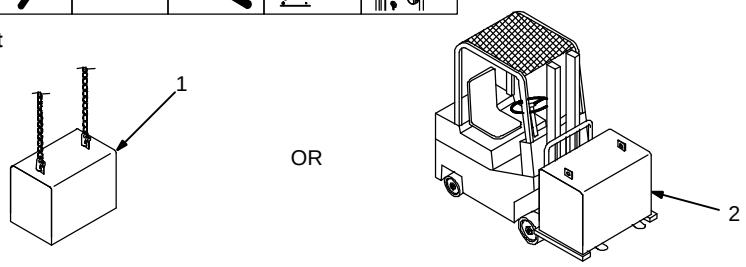

Location And Airflow

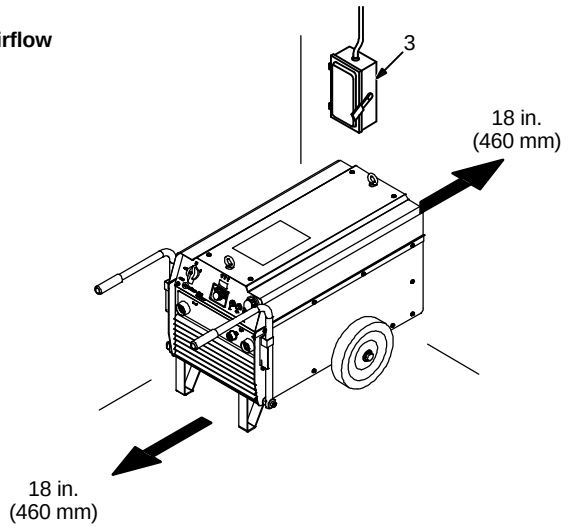

1 Lifting Eye

2 Lifting Forks

Use lifting eye or lifting forks to move unit.

If using lifting forks, extend forks beyond opposite side of unit.

3 Line Disconnect Device

Locate unit near correct input power supply.

Special installation may be required where gasoline or volatile liquids are present – see NEC Article 511 or CEC Section 20.

3-7. Tipping

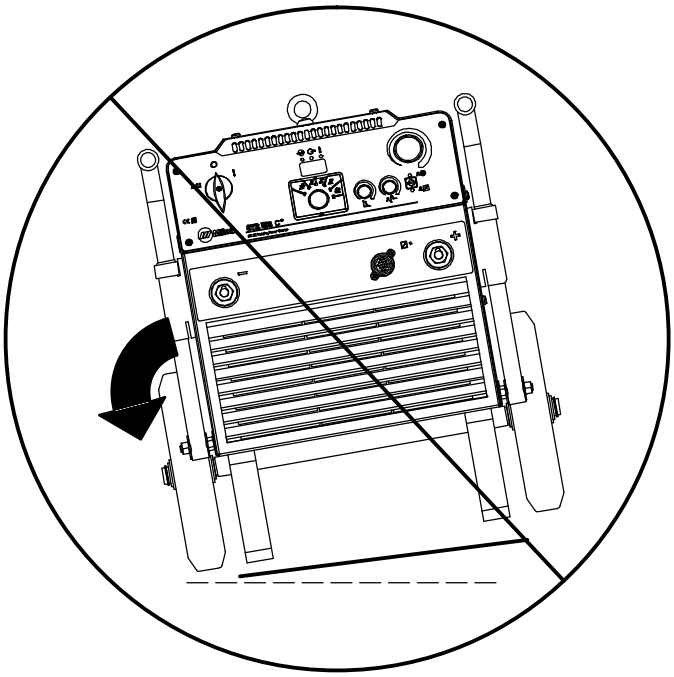

Do not move or operate unit where it could tip.

956172997_5-A

3-8. Weld Output Terminals and Selecting Cable Sizes

NOTICE *− The Total Cable Length in Weld Circuit (see table below) is the combined length of both weld cables. For example, if the power source is 30 m (100 ft) from the workpiece, the total cable length in the weld circuit is 60 m (2 cables x 30 m). Use the 60 m (200 ft) column to determine cable size.*

Weld Output Terminals

Turn off power before connecting to weld output terminals.

Do not use worn, damaged, undersized, or poorly spliced cables.

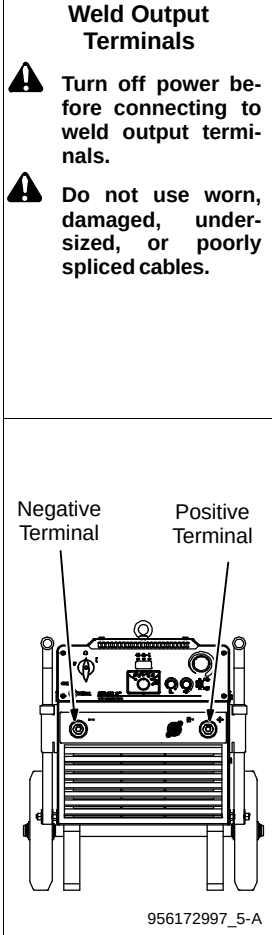

Welding Amperes	Weld Cable Size** and Total Cable (Copper) Length in Weld Circuit Not Exceeding***							
	30 m (100 ft) or Less		45 m (150 ft)	60 m (200 ft)	70 m (250 ft)	90 m (300 ft)	105 m (350 ft)	120 m (400 ft)
	10 − 60% Duty Cycle mm² (AWG)	60 − 100% Duty Cycle mm² (AWG)	10 − 100% Duty Cycle mm² (AWG)					
100	20 (4)	20 (4)	20 (4)	30 (3)	35 (2)	50 (1)	60 (1/0)	60 (1/0)
150	30 (3)	30 (3)	35 (2)	50 (1)	60 (1/0)	70 (2/0)	95 (3/0)	95 (3/0)
200	30 (3)	35 (2)	50 (1)	60 (1/0)	70 (2/0)	95 (3/0)	120 (4/0)	120 (4/0)
250	35 (2)	50 (1)	60 (1/0)	70 (2/0)	95 (3/0)	120 (4/0)	2x70 (2 ea. 2/0)	2x70 (2 ea. 2/0)
300	50 (1)	60 (1/0)	70 (2/0)	95 (3/0)	120 (4/0)	2x70 (2 ea. 2/0)	2x95 (2 ea. 3/0)	2x95 (2 ea. 3/0)
350	60 (1/0)	70 (2/0)	95 (3/0)	120 (4/0)	2x70 (2 ea. 2/0)	2x95 (2 ea. 3/0)	2x95 (2 ea. 3/0)	2x120 (2 ea. 4/0)
400	60 (1/0)	70 (2/0)	95 (3/0)	120 (4/0)	2x70 (2 ea. 2/0)	2x95 (2 ea. 3/0)	2x120 (2 ea. 4/0)	2x120 (2 ea. 4/0)
500	70 (2/0)	95 (3/0)	120 (4/0)	2x70 (2 ea. 2/0)	2x95 (2 ea. 3/0)	2x120 (2 ea. 4/0)	3x95 (3 ea. 3/0)	3x95 (3 ea. 3/0)
600	95 (3/0)	120 (4/0)	2x70 (2 ea. 2/0)	2x95 (2 ea. 3/0)	2x120 (2 ea. 4/0)	3x95 (3 ea. 3/0)	3x120 (3 ea. 4/0)	3x120 (3 ea. 4/0)

* This chart is a general guideline and may not suit all applications. If cable overheats, use next size larger cable.

**Weld cable size is based on either a 4 volts or less drop or a current density of at least 300 circular mils per ampere.

***For distances longer than those shown in this guide, call a factory applications representative.

Milan Ref. S-0007-G 2009−08

3-9. Remote Receptacle Information

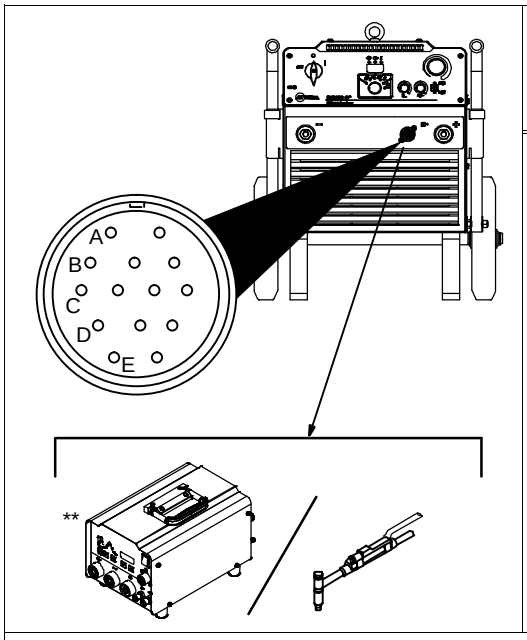

REMOTE	Socket*	Socket Information
REMOTE CONTROL	A	Contact closure to B completes 24 volts AC contactor control circuit.
	B	Contact closure to A completes 24 volts AC contactor control circuit.
	C	Output to remote control; +10 volts DC.
	D	Remote control circuit common.
	E	0 to +10 volts DC input command signal from remote control.

* The remaining sockets are not used.
**When connecting HF5000 unit, set amperage at 400 amps according to instructions in HF5000 owner's manual.

Notes

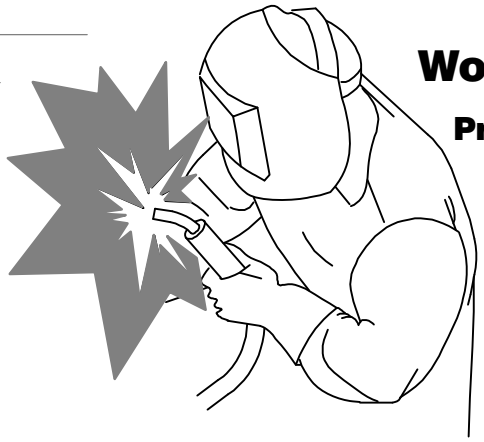

Work like a Pro!

Pros weld and cut safely. Read the safety rules at the beginning of this manual.

3-10. Typical Connections For Stick (SMAW) Welding

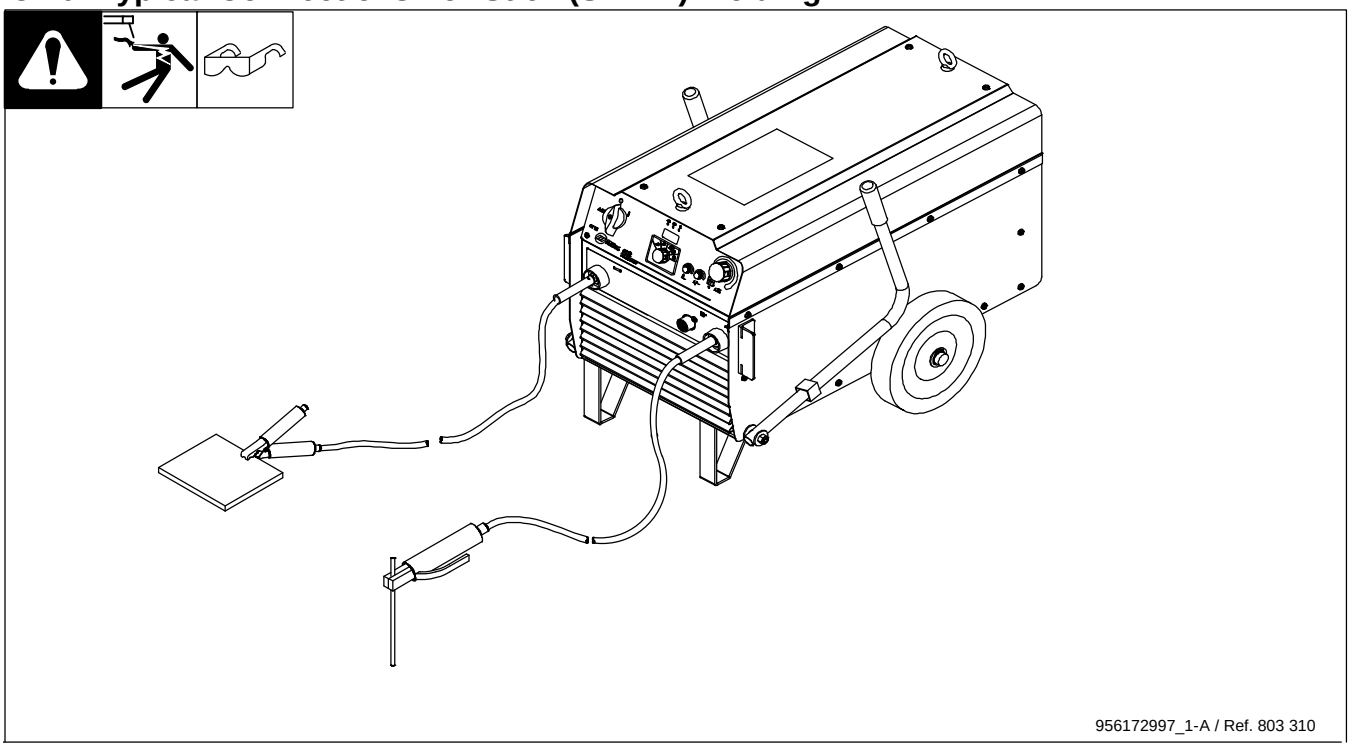

3-11. Typical Connections For TIG (GTAW) Welding

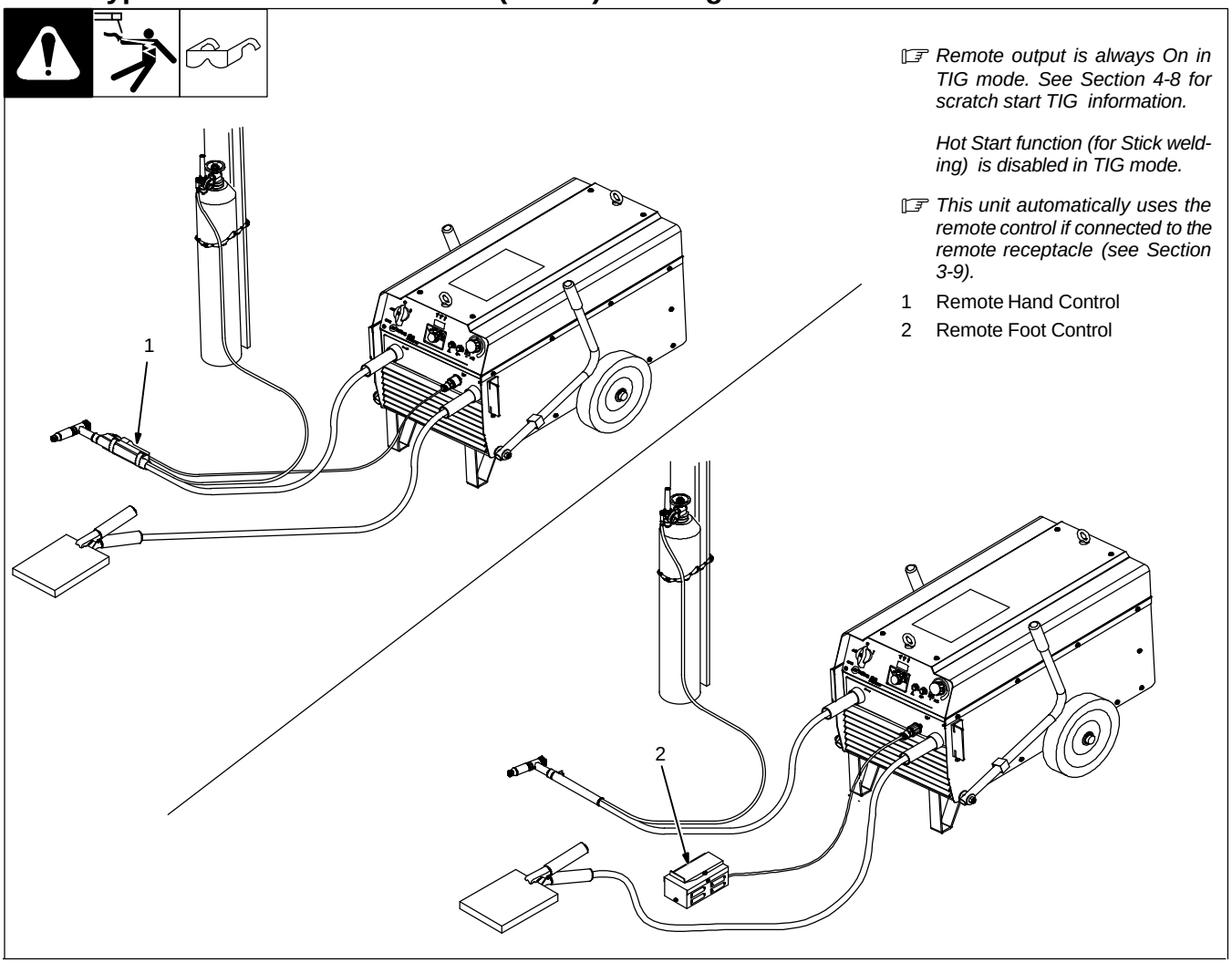

☞ *Remote output is always On in TIG mode. See Section 4-8 for scratch start TIG information.*

Hot Start function (for Stick welding) is disabled in TIG mode.

☞ *This unit automatically uses the remote control if connected to the remote receptacle (see Section 3-9).*

1 Remote Hand Control

2 Remote Foot Control

3-12. Electrical Service Guide

Failure to follow these fuse and circuit breaker recommendations could create an electric shock or fire hazard. These recommendations are for a dedicated circuit that applies to the rated output and duty cycle of the welding power source.

In dedicated circuit installations, the National Electrical Code (NEC) allows the receptacle or conductor rating to be less than the rating of the circuit protection device. All components of the circuit must be physically compatible. See NEC articles 210.21, 630.11, and 630.12.

STR 500	3-Phase
Input Voltage (V)	400
Input Amperes (A) At Rated Output	47
Max Recommended Standard Fuse Rating In Amperes [1]	
Time-Delay Fuses [2]	50
Normal Operating Fuses[3]	70
Min Input Conductor Size In mm^2 (AWG) [4]	6 (10)
Max Recommended Input Conductor Length In Meters (Feet)	42 (138)
Min Grounding Conductor Size In mm^2 (AWG) [4]	6 (10)
** Power cord supplied with the unit is sized for 230V operation. Larger power cord may be required for cable lengths greater than 3 meters. Consult national and local regulations.	

Reference: 2011 National Electrical Code (NEC) (including article 630)

1 If a circuit breaker is used in place of a fuse, choose a circuit breaker with time-current curves comparable to the recommended fuse.

2 “Time-Delay” fuses are UL class “RK5” . See UL 248.

3 “Normal Operating” (general purpose - no intentional delay) fuses are UL class “K5” (up to and including 60 amps), and UL class “H” (65 amps and above).

4 Conductor data in this section specifies conductor size (excluding flexible cord or cable) between the panelboard and the equipment per NEC Table 310.15(B)(16). If a flexible cord or cable is used, minimum conductor size may increase. See NEC Table 400.5(A) for flexible cord and cable requirements.

Notes

3-13. Connecting Input Power

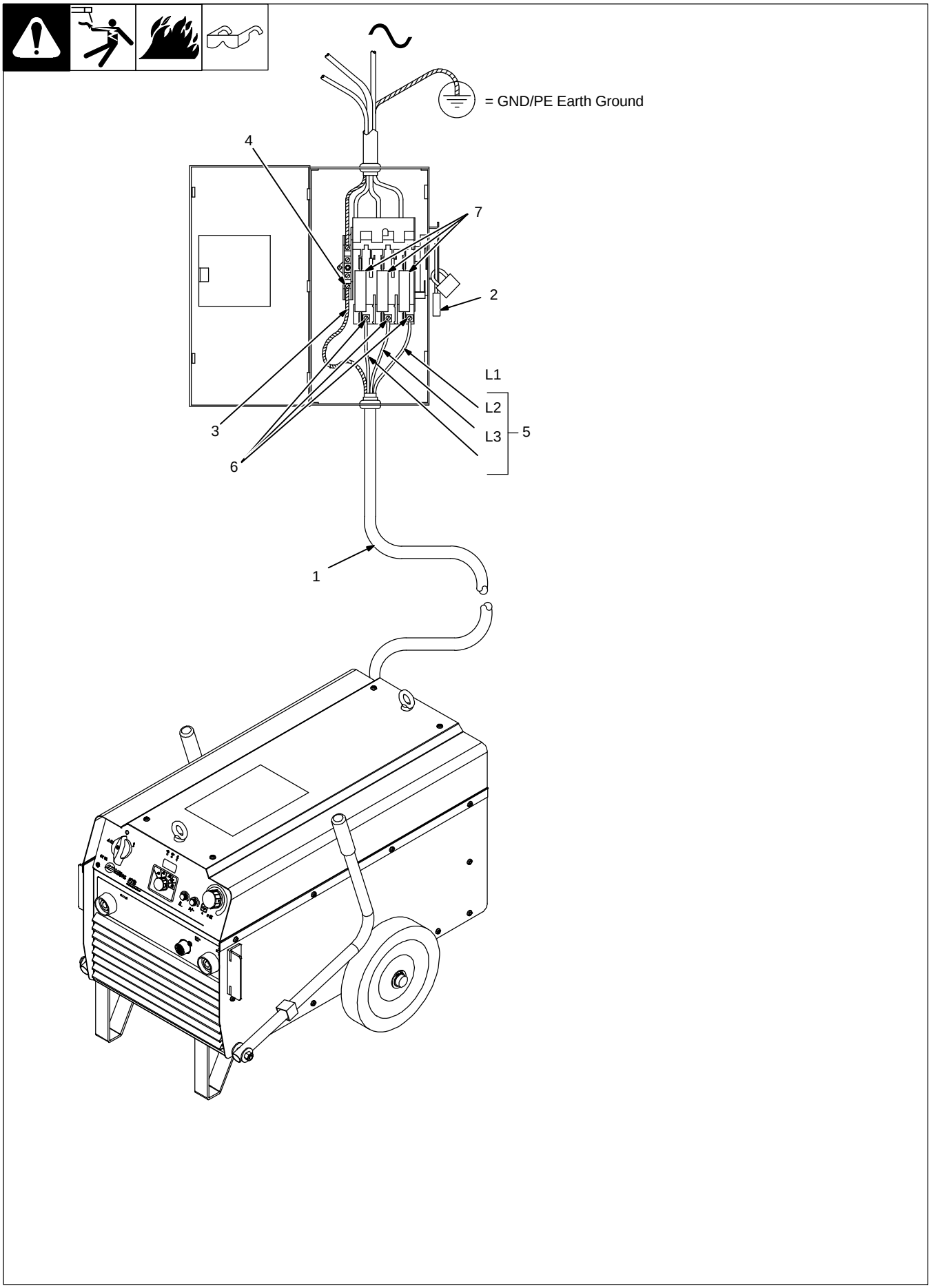

3-13. Connecting 3-Phase Input Power (Continued)

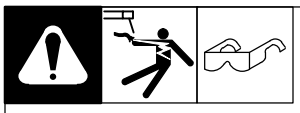

Disconnect and lockout/tagout input power before connecting input conductors from unit. Follow established procedures regarding the installation and removal of lockout/tagout devices.

Always connect green or green/yellow conductor to supply grounding terminal first, and never to a line terminal.

See rating label on unit and check input voltage available at site.

For Three-Phase Operation

1 Input Power Cord.

2 Disconnect Device (switch shown in the OFF position)

3 Green Or Green/Yellow Grounding Conductor

4 Disconnect Device Grounding Terminal

5 Input Conductors (L1, L2 And L3)

6 Disconnect Device Line Terminals

Connect green or green/yellow grounding conductor to disconnect device grounding terminal first.

Connect input conductors L1, L2, and L3 to disconnect device line terminals.

7 Over-Current Protection

Select type and size of over-current protection using Section 3-12 (fused disconnect switch shown).

Close and secure door on disconnect device. Follow established lockout/tagout procedures to put unit in service.

input2 2012−05

Notes

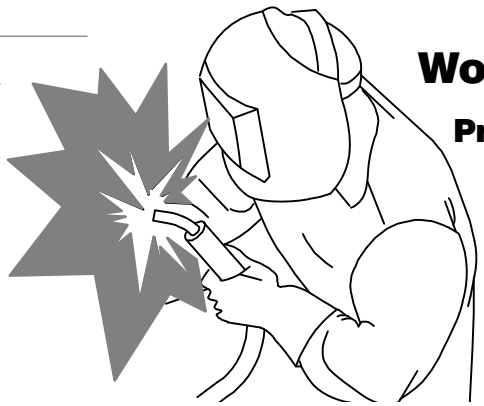

Work like a Pro!

Pros weld and cut safely. Read the safety rules at the beginning of this manual.

4-1. Front Panel Controls

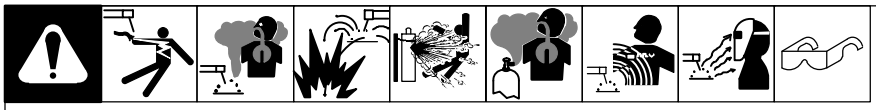

1 Negative (−) Weld Terminal
2 Power On-Off Switch
3 Welding Process Selection Control (Contactor) (See Section 4-3)
4 Welding Current Indicator
5 Power On Pilot Light
6 Weld Output Indicator Light
7 High Temperature Indicator
8 Arc Force (DIG) Control (See Section 4-4)
9 Hot Start Control (See Section 4-4)
10 Weld Current Control
11 Output Control Selector (See Section 4-5)
12 Positive (+) Weld Terminal
13 Remote Control Receptacle (See Section 3-9)

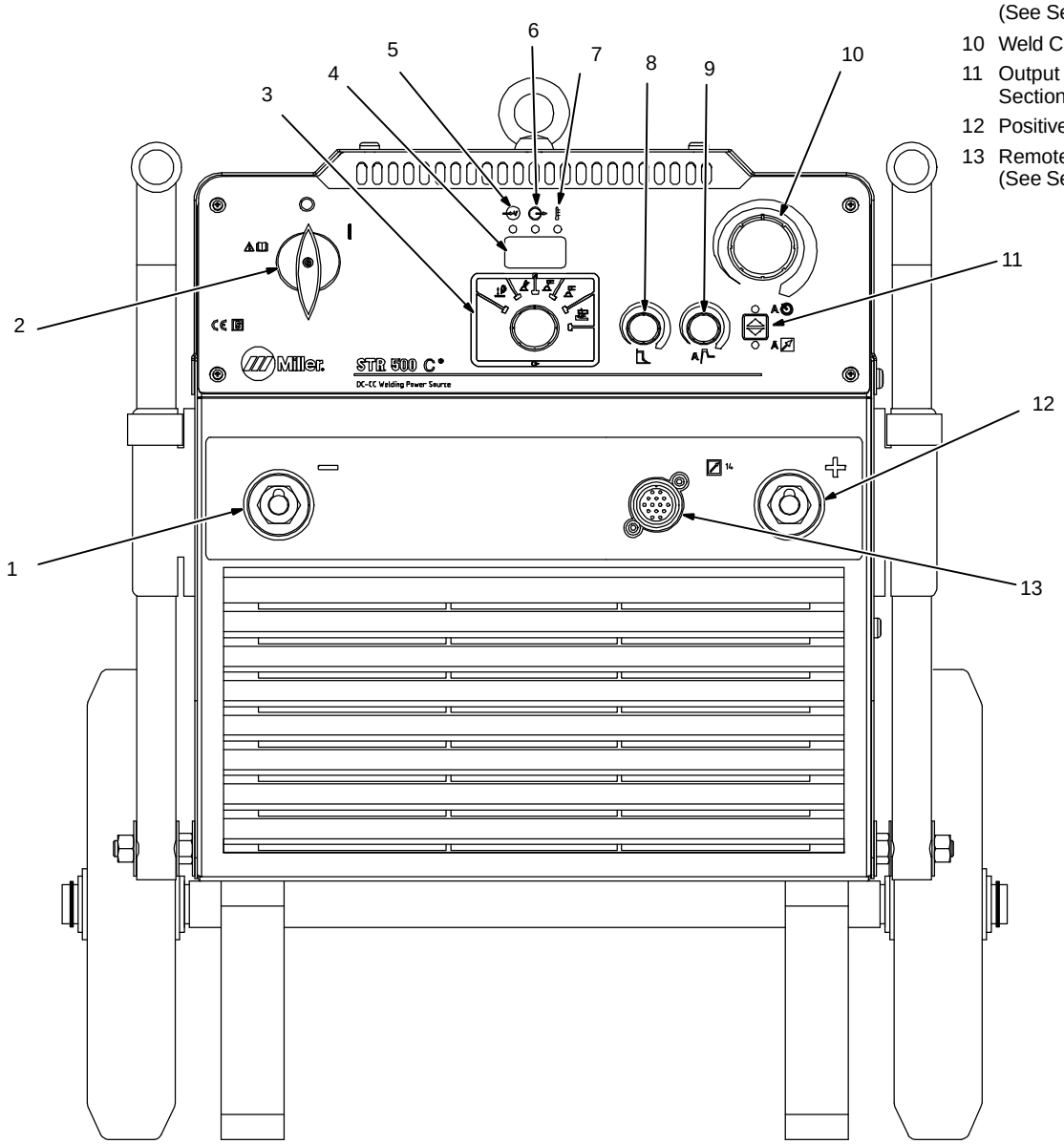

4-2. Rear Panel Controls

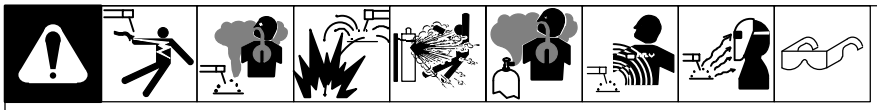

1 48 Volt AC Receptacle RCPT1

2 Supplementary Protector CB1

CB1 protects the 48 volts portion of the circuit from overload.

3 115 Volt AC Receptacle RCPT2

4 Supplementary Protector CB2

CB2 protects the 115 volts AC portion of the circuit from overload.

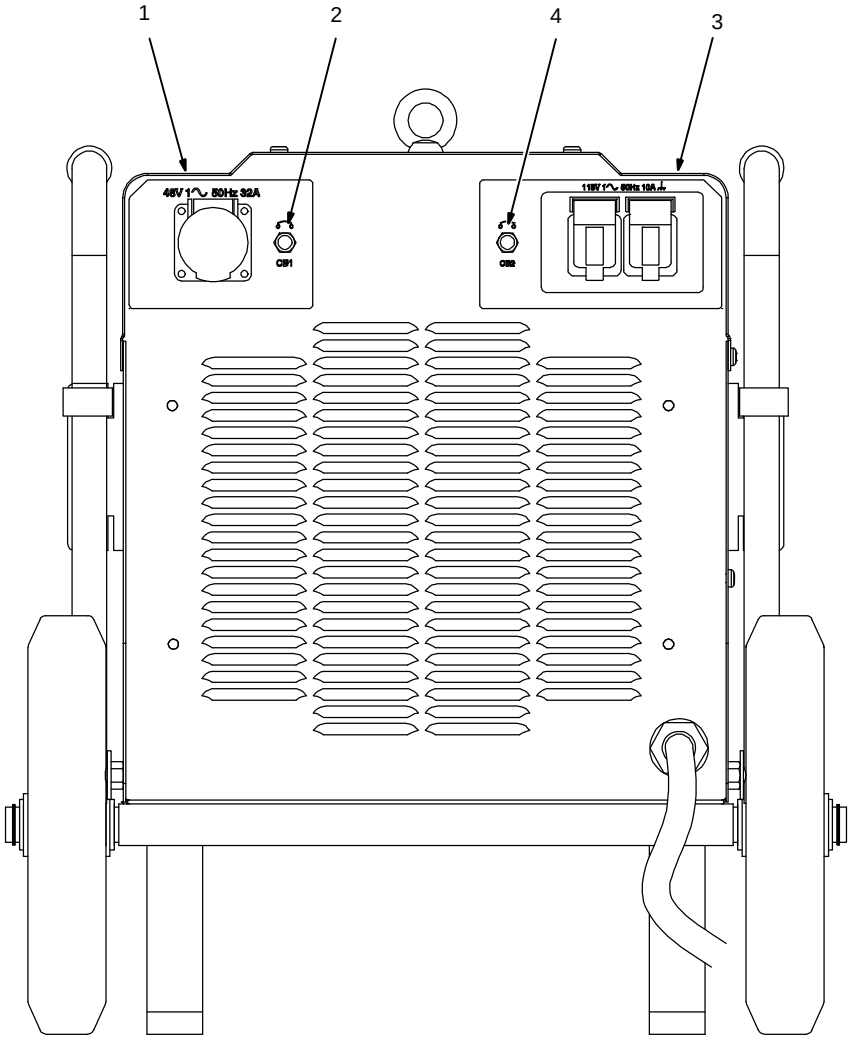

4-3. Welding Process Selection For STR 500C

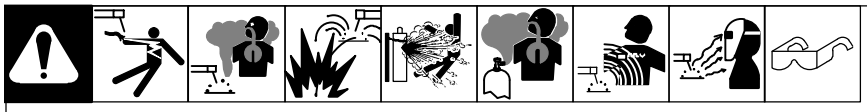

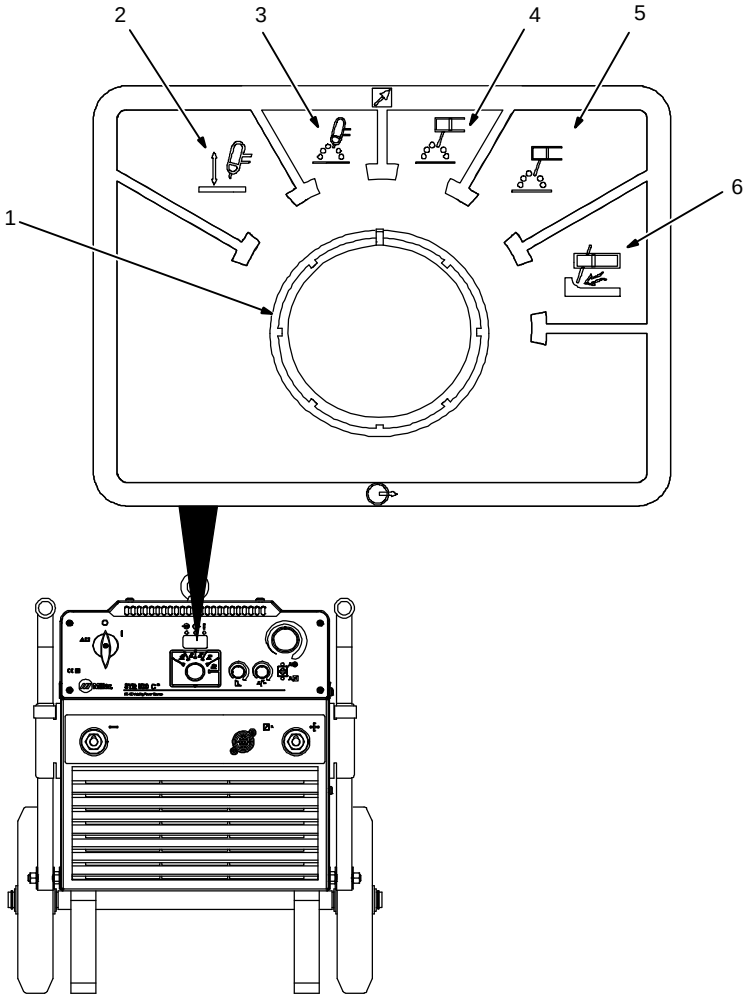

1 Welding Process Selection Control (Contactor)

Use control to select weld process. The weld process selected determines weld output on/off control. See Table below.

Weld output terminals are energized when welding precess selection control is in the TIG Lift-Arc or Stick positions.

2 TIG Lift-Arc − This is a DCEN (direct current electrode negative) process in which the electrode must come in contact with work piece to initiate an arc(see Section 4-9). Make connections according to Section 3-11.

3 TIG - (Remote) − This is a GTAW process. Make connections according to Section 3-11.

4 CC - (Remote) − This is a DCEP (direct current electrode positive) process. Make connections according to Section 3-10.

5 Stick - (SMAW) − This is a DCEP (direct current electrode positive) process. Make connections according to Section 3-10.

6 Stick Gouging

This is an air Stick welding holder which uses gouging electrodes for air carbon arc metal removal process.

When Stick is selected, use arc force (DIG) control to increase SMAW short-circuit amperage at low arc voltage. This allows the operator to use a very short arc length without sticking the electrode.

Output ON/Off Control Status

Switch Setting	Output On/Off Control
TIG Lift-Arc	Electrode always energized (Hot).
TIG-Remote	Through Remote 14 receptacle. Remote on/off switch required.
CC-Remote	Through Remote 14 receptacle. Remote on/off switch required.
Stick	Electrode always energized (Hot).

4-4. Hot Start And Arc Force (DIG) Controls

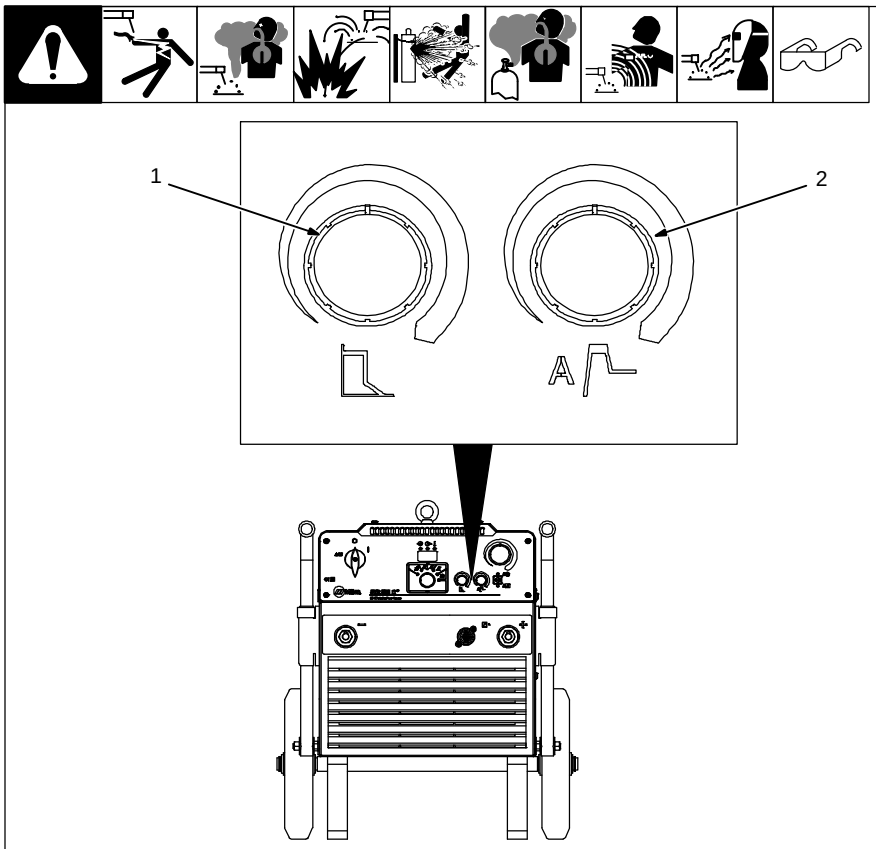

Weld output terminals are energized when welding process selector control is in the Stick position.

1 Arc Force (DIG) Control

Control increases SMAW short-circuit amperage at low arc voltage. This allows the operator to use a very short arc length without sticking the electrode.

Set control at 0 for normal welding amperage. Turn control clockwise to increase short-circuit amperage.

2 Hot Start Control

Used in Stick and CC mode. Allows increasing the output amperage at the start of a weld.

Set control at 0 for normal welding output amperage. Turn control clockwise to increase starting amperage.

4-5. Output Control Selector

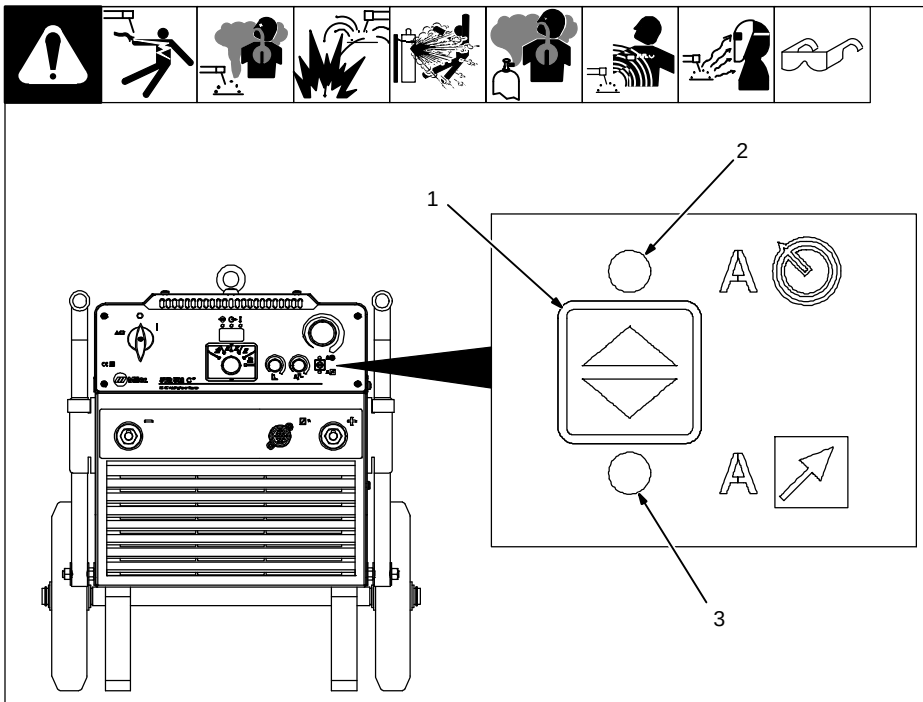

Weld output terminals are energized when welding process selector control is in the TIG Lift-Arc or Stick positions.

1 Output Control Selector

Use switch to select way of controlling unit output.

2 Panel Selection LED

LED illuminates when panel control is selected.

3 Remote Selection LED

LED illuminates when remote output is selected. Connect remote control to Remote 14 receptacle (see Section 3-9).

4-6. Amperage Control

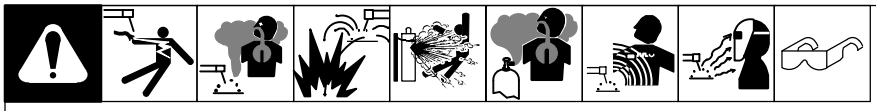

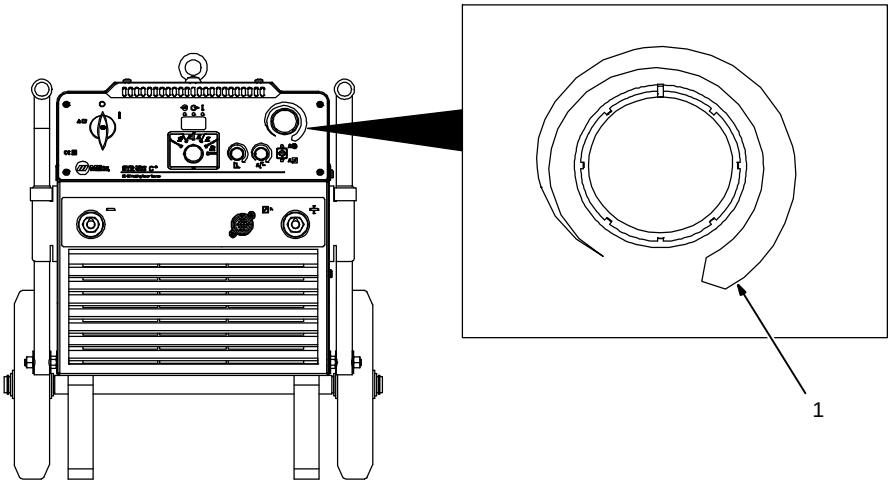

Weld output terminals are energized when welding process selector control is in the TIG Lift-Arc or Stick positions.

1 Amperage Control

Rotate control clockwise to increase amperage.

4-7. Stick Start Procedure − Scratch Start Technique

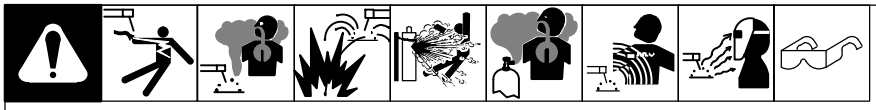

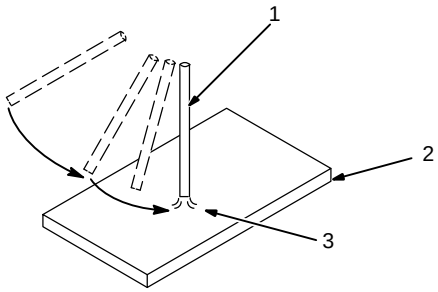

With Stick selected, start arc as follows:

1 Electrode

2 Workpiece

3 Arc

Drag electrode across workpiece like striking a match; lift electrode slightly after touching work. If arc goes out electrode was lifted to high. If electrode sticks to workpiece, use a quick twist to free it.

4-8. Scratch Start TIG

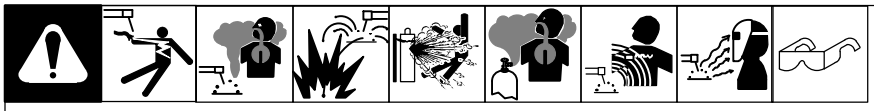

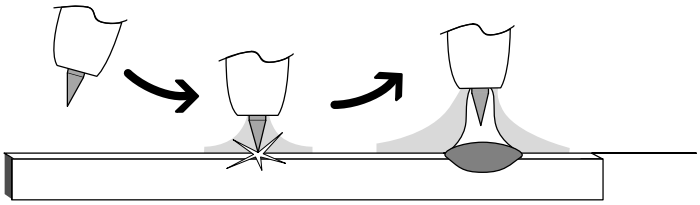

This starting method is not acceptable for critical applications since small tungsten particles may become embedded in the workpiece and contaminate the weld.

Turn gas on.

Quickly drag electrode across workpiece like striking a match; lift electrode slightly after touching work.

If arc goes out electrode was lifted to high. If electrode sticks to workpiece, use a quick twist to free it.

Ref. WM Marketing

4-9. Lift-Arc Start Procedures

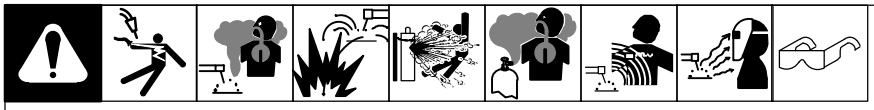

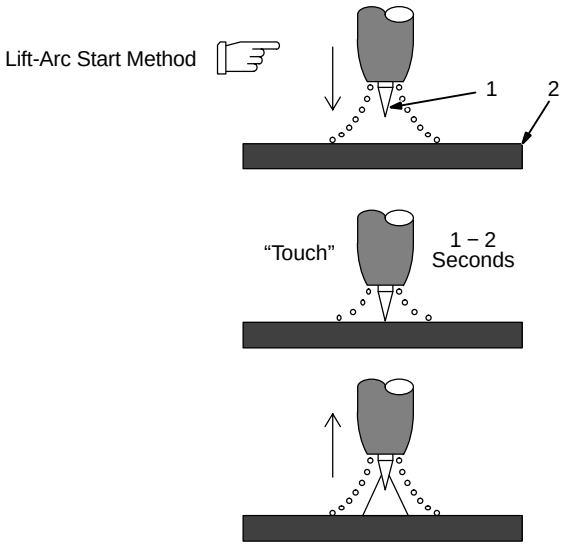

Lift-Arc Start

When Lift-Arc™ button light is On, start arc as follows:

1 TIG Electrode

2 Workpiece

Touch tungsten electrode to workpiece at weld start point, enable output and shielding gas with torch trigger, foot control, or hand control. **Hold electrode to workpiece for 1-2 seconds**, and slowly lift electrode. Arc is formed when electrode is lifted.

Normal open-circuit voltage is not present before tungsten electrode touches workpiece; only a low sensing voltage is present between electrode and workpiece. The solid-state output contactor does not energize until after electrode is touching workpiece. This allows electrode to touch workpiece without overheating, sticking, or getting contaminated.

Application:

Lift-Arc is used for the DCEN or AC GTAW process when HF Start method is not permitted, or to replace the scratch method.

SECTION 5 − MAINTENANCE AND TROUBLESHOOTING

5-1. Routine Maintenance

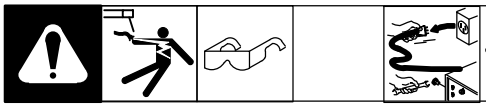

Disconnect power before maintaining.

	✓ = Check ◇ = Change ◯ = Clean ☆ = Replace * To be done by Factory Authorized Service Agent			
Every **3** Months	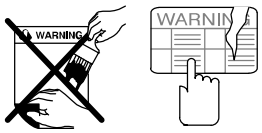 ☆ Damaged Or Unreadable Labels	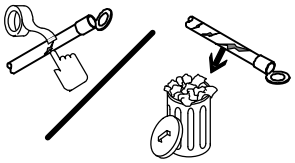 ☆ Cracked Weld cables	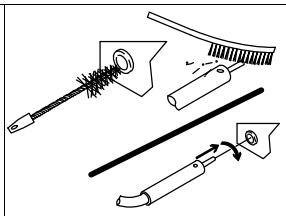 ◯✓ Weld Connections	
Every **6** Months	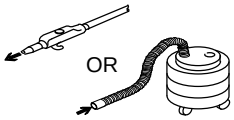 ◯ Inside Unit			

5-2. Help Displays

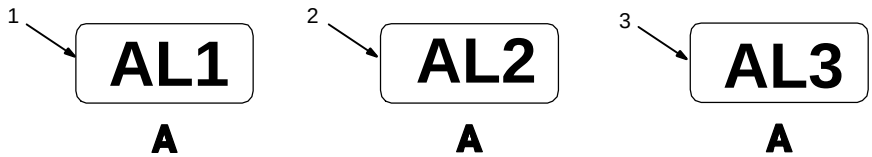

1 AL1 Display
2 AL2 Display
3 AL3 Display

☞ *Power On pilot light flashes when any of these help displays are shown.*

Displays indicate a malfunction in the primary power circuit (loss of input power phase). If any of these displays are shown, check input power connections. If trouble continues, contact a Factory Authorized Service Agent.

5-3. Troubleshooting

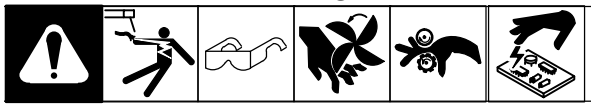

Trouble	Remedy
No weld output; fan does not run.	Be sure Power switch is On (see Section 4-1).
	Be sure line disconnect switch is in On position.
	Check and replace line fuses if open. Reset breakers if necessary.
Fan does not run; weld output okay.	Be sure nothing is blocking movement of fan. If fan does not run freely, replace fan motor.
Erratic or improper weld output.	Clean and tighten all weld cable connections.
	Check for proper size and type of cable (see Section 3-8).
	Check for proper input and output connections (see Sections 3-8 and/or 3-13).
	Replace electrode.

Trouble	Remedy
Erratic arc with excessive spatter.	Use dry, properly stored electrodes.
	Shorten arc length.
	Reduce amperage setting.
Electrode freezing to work.	Increase amperage setting.
	Increase arc length.
	Use dry, properly stored electrodes.
Low weld output with no control.	Check position of Amperage Control (see Section 4-1).
Limited output and low open-circuit voltage.	Check incoming power for correct voltage. Replace line fuse if open (see Section 3-13).
	Check for proper input and output connections (see Sections 3-8 and/or 3-13).

Notes

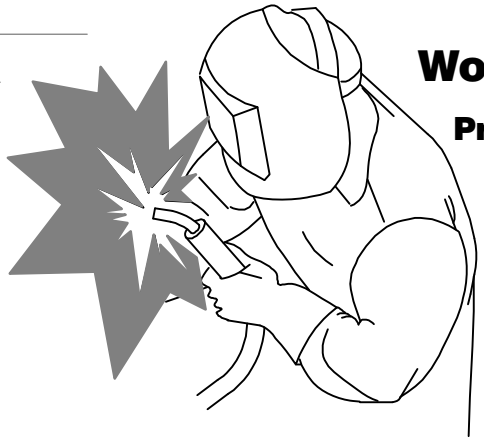

Work like a Pro!

Pros weld and cut safely. Read the safety rules at the beginning of this manual.

SECTION 6 − ELECTRICAL DIAGRAMS

⚠ WARNING	• Do not touch live electrical parts. • Disconnect input power or stop engine before servicing. • Do not operate with covers removed. • Have only qualified persons install, use, or service this unit.
ELECTRIC SHOCK HAZARD	

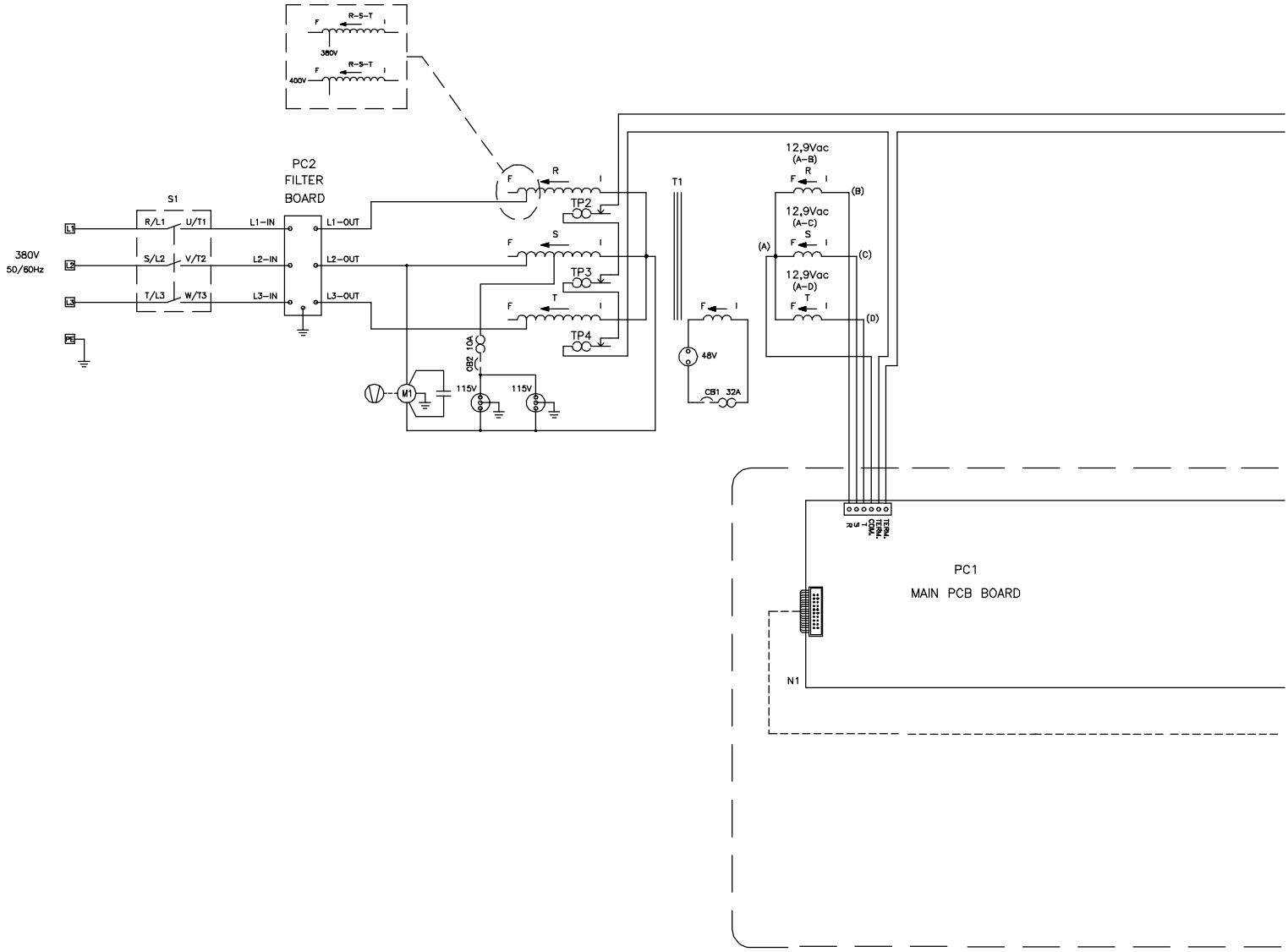

Figure 6-1. Circuit Diagram For STR 500 C

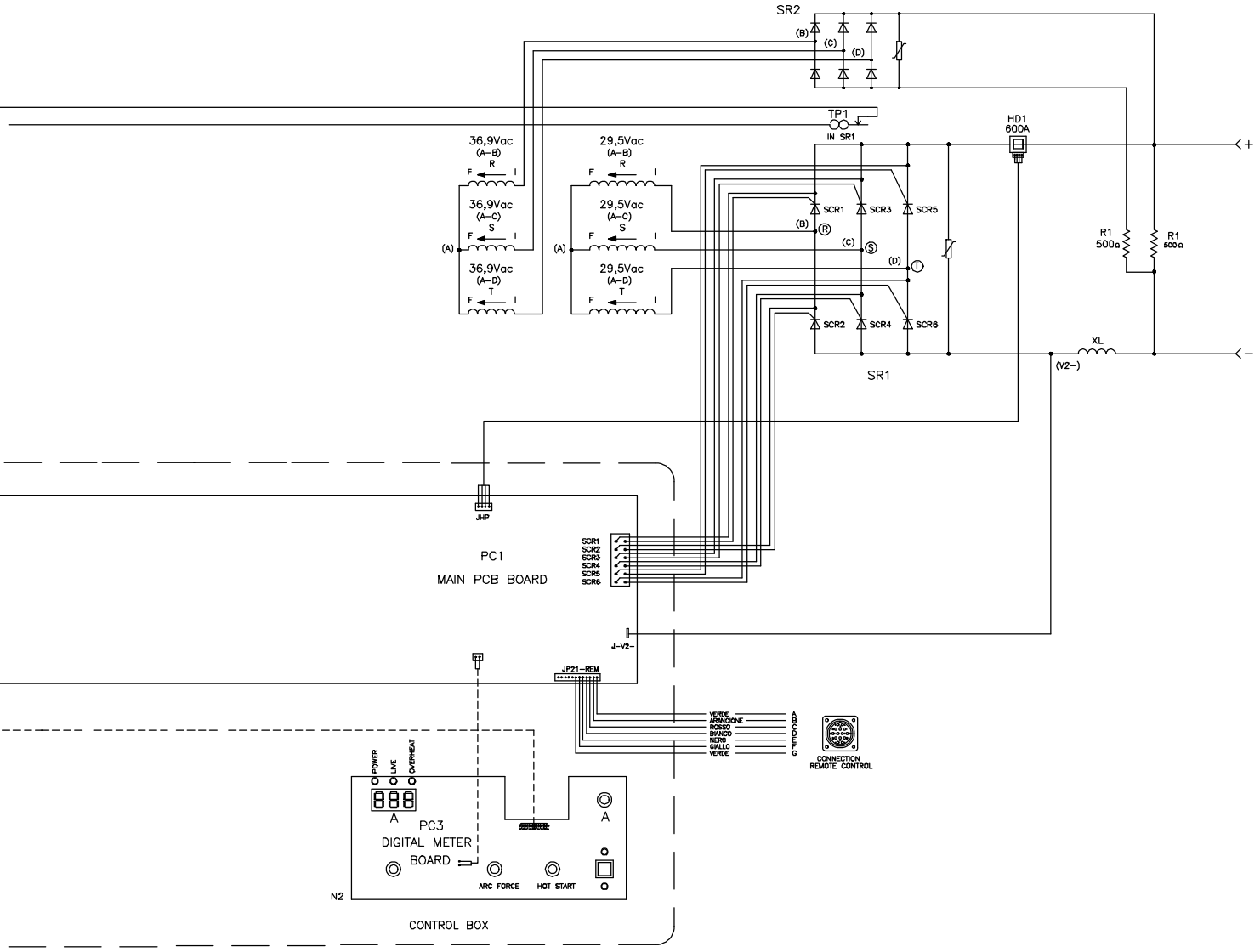
SR2
(B)
(C)
(D)
TP1
IN SR1
HD1
600A
+
36,9Vac
(A–B)
R
F
I
36,9Vac
(A–C)
S
36,9Vac
(A–D)
T
(A)
29,5Vac
(A–B)
29,5Vac
(A–C)
29,5Vac
(A–D)
SCR1
SCR3
SCR5
SCR2
SCR4
SCR6
R
S
T
R1
500Ω
XL
(V2–)
–
SR1
JHP
PC1
MAIN PCB BOARD
SCR1
SCR2
SCR3
SCR4
SCR5
SCR6
–V2–
JP21–REM
VERDE
ARANCIONE
ROSSO
BIANCO
NERO
GIALLO
VERDE
CONNECTION
REMOTE CONTROL
POWER
LIVE
OVERHEAT
888
A
PC3
DIGITAL METER
BOARD
ARC FORCE
HOT START
N2
CONTROL BOX

956172001-A

☞ *Hardware is common and not available unless listed.*

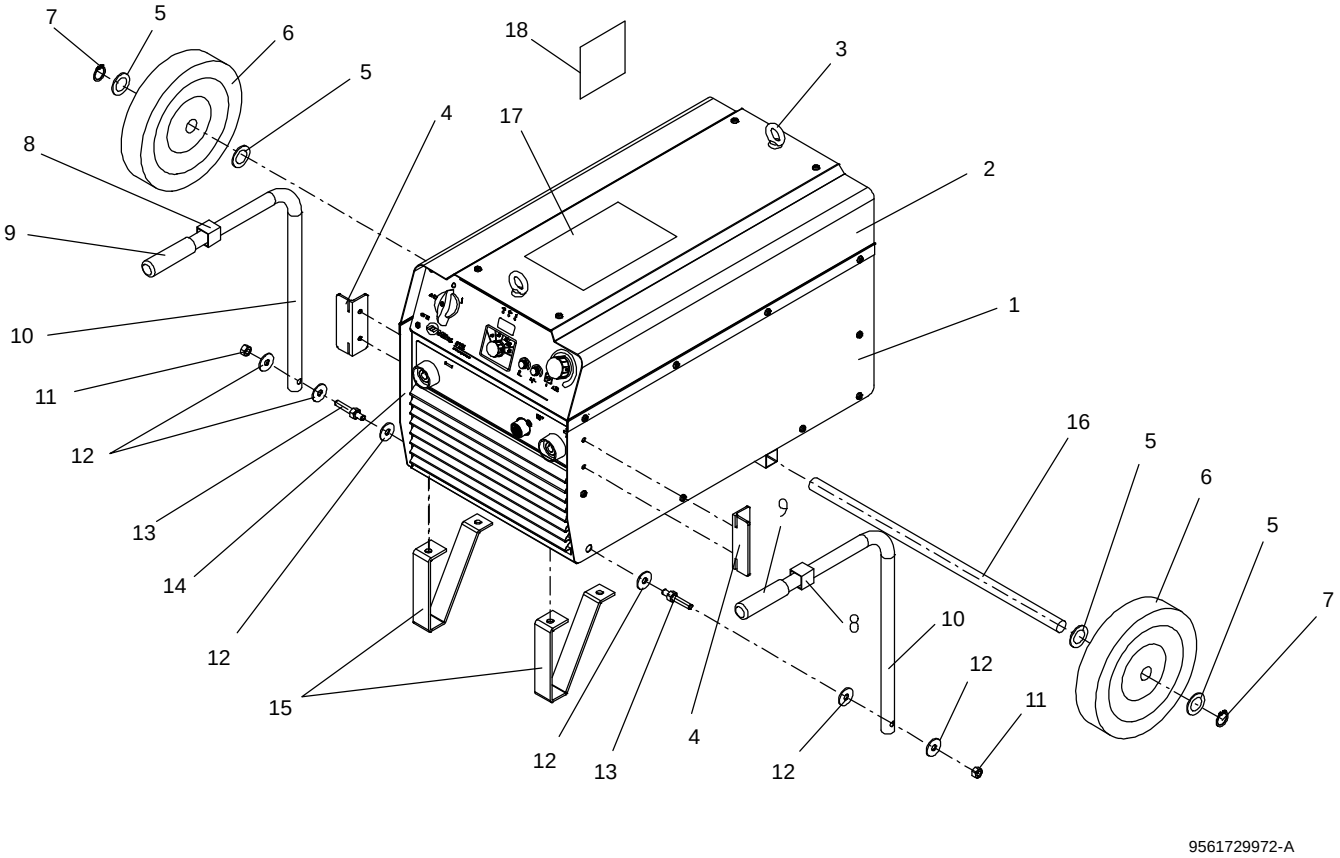

Figure 7-1. Case And Running Gear

Item No.	Dia. Mkgs.	Part No.	Description	Quantity
Figure 7-1. Case And Running Gear				
1		+156122085	Panel, RH	1
2		+156121042	Upper panel	1
3		156011019	Eyebolt	2
4		156005129	Washer, Hooking (Support For Handle)	2
5		156009156	Washer, Brass .26 x 35 x 3 mm, black	4
6		056054057	Wheel d.300	2
7		156023156	Cup, Retaining Wheel	2
8		156009127	Washer, Round hooking (For Handle)	2
9		056020071	Knob (for hose) 25 mm dia.	2
10		156002047	Handle	2
11		156018114	Nut, Locking M10	2
12		156009128	Washer, flat 10x30	6
13		156012132	Handle, Fixing Pin	2
14		+156122086	Panel, LH	1
15		156110001	Foot	2
16		156012133	Axle, Wheels 25x605 mm	1
17		176254	Label, General Precautionary	1
18		207291	Label, Warning Electric Shock Input 1 And 3Phase CE	1

\+ When ordering a component originally displaying a precautionary label, the label should also be ordered.

To maintain the factory original performance of your equipment, use only Manufacturer's Suggested Replacement Parts. Model and serial number required when ordering parts from your local distributor.

☞ *Hardware is common and not available unless listed.*

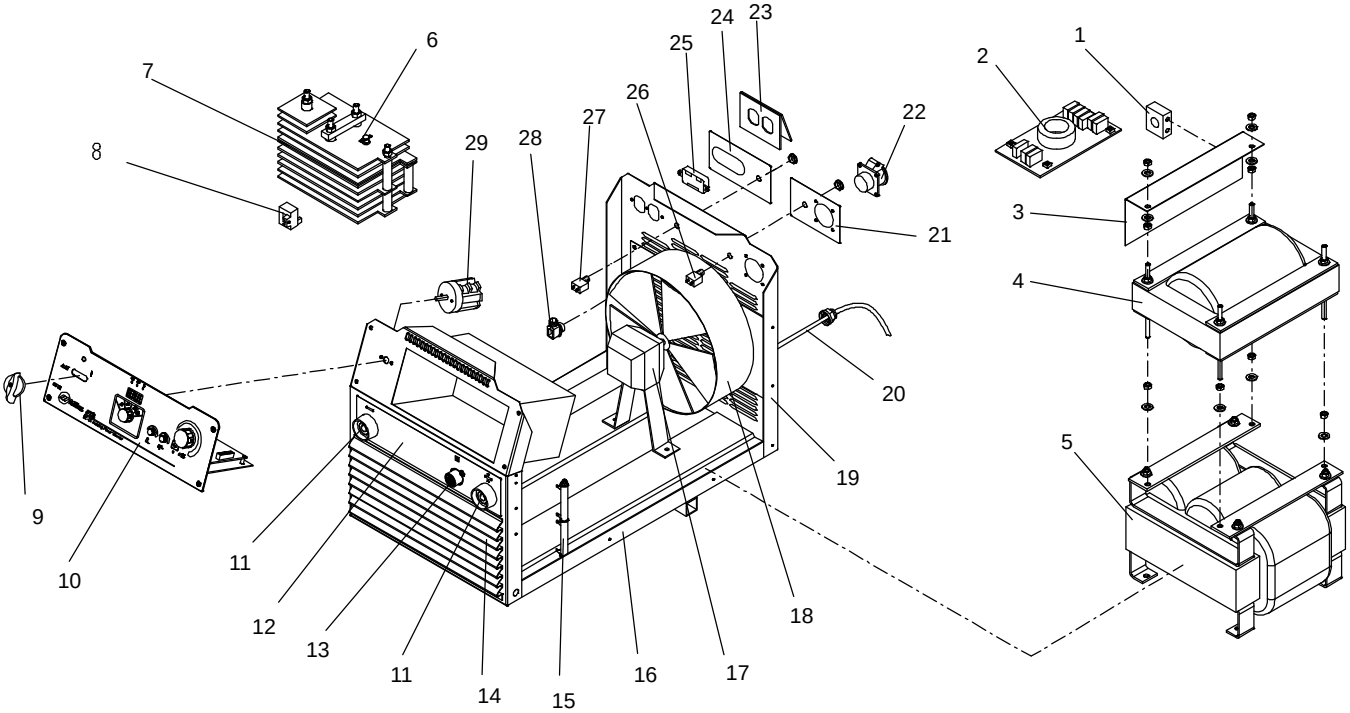

956172997_3-A

Figure 7-2. Main Assembly

Item No.	Dia. Mkgs.	Part No.	Description	Quantity
			Figure 7-2. Main Assembly	
1		656089037	Clamp, cable	1
2	PC2	057084190	PCB, filter	1
3		156005185	Bracket, mounting filter	1
4	L1	057098017	Choke, 80x62x240 Al	1
5	T1	058021150	Transformer 380/400V, 60x110x180 A	1
6	TP1	056159026	Thermostat 100c 10 A	1
7	SR1, SR2	056050159	Rectifier	1
8	HD1	057028116	Probe Kit, 600A	1
9		056020037	Knob, Pointer D.48	1
10	PC1,PC3	028069154	Control Panel	1

Item No.	Dia. Mkgs.	Part No.	Description	Quantity
			Figure 7-2. Main Assembly (continued)	
11		056076152	Socket, Dinse 50 Sq Mm	2
12		356029223	Nameplate, Lower	1
13		058066076	Connector kit, 14 Pin Female	1
14		156118092	Panel, front c/w box	1
15	R1,R2	056059281	Resistor, 500 Ohm D16 L90	2
16		156006069	Base	1
17	FM1	057035009	Fan, 230 V, 110W	1
18		116117077	Conveyor	1
19		156118073	Panel, Rear	1
20		057014054	Cable, Primary Input 4 X10 Mt.4,5	1
21		356029234	Nameplate, Rear, 48V	1
22	RCPT1	056076212	Outlet, 32 A	1
23		217297	Cover, receptacle duplex	1
24		356029225	Nameplate, Rear, 115V	1
25	RCPT2	604176	Receptacle, 115V	1
26	CB1	056067263	Breaker, Circuit 32 A	1
27	CB2	056067264	Breaker, Circuit 10 A	1
28		656089026	Clamp, Cable, D30	1
29	S1	056067210	Switch, 32 A	1

To maintain the factory original performance of your equipment, use only Manufacturer's Suggested Replacement Parts. Model and serial number required when ordering parts from your local distributor.

☞ *Hardware is common and not available unless listed.*

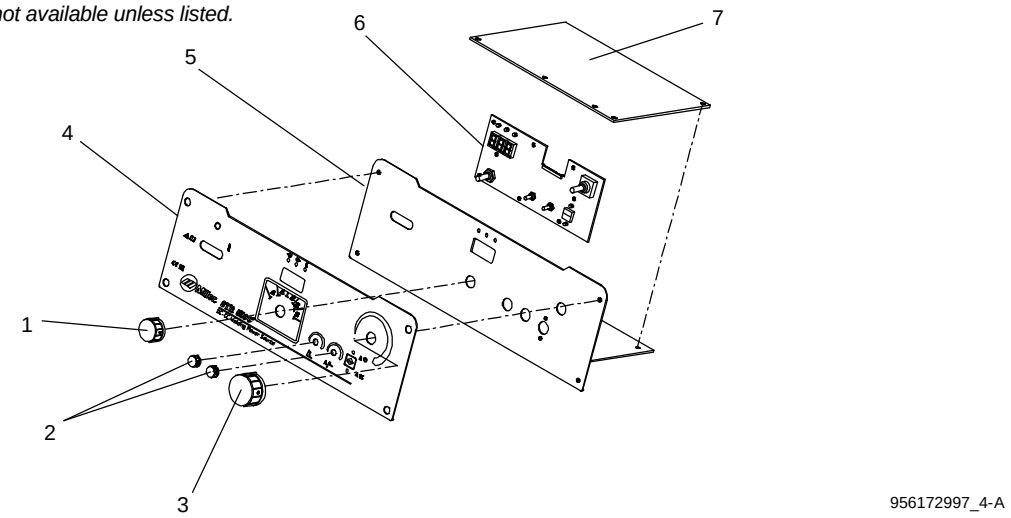

Figure 7-3. Front Panel

Item No.	Dia. Mkgs.	Part No.	Description	Quantity
			Figure 7-3. Front Panel	
1		193919	Knob, pointer 1.250 dia	1
2		193920	Knob, pointer .840 dia	2
3		171007	Knob, pointer 1.660 dia	1
4		356029255	Nameplate, upper, front	1
5		116145013	Plate, PCB support	1
6	PC3	057084153	PCB, digital meter board, 5 pos	1
7	PC1	057084191	PCB, main board, 5 pos	1

To maintain the factory original performance of your equipment, use only Manufacturer's Suggested Replacement Parts. Model and serial number required when ordering parts from your local distributor.

Notes

Notes

Notes

TRUE BLUE® WARRANTY

Effective January 1, 2013
(Equipment with a serial number preface of MD or newer)

This limited warranty supersedes all previous Miller warranties and is exclusive with no other guarantees or warranties expressed or implied.

LIMITED WARRANTY − Subject to the terms and conditions below, ITW Welding Products Italy warrants to its original retail purchaser that new Miller equipment sold after the effective date of this limited warranty is free of defects in material and workmanship at the time it is shipped by Miller. THIS WARRANTY IS EXPRESSLY IN LIEU OF ALL OTHER WARRANTIES, EXPRESS OR IMPLIED, INCLUDING THE WARRANTIES OF MERCHANTABILITY AND FITNESS.

Within the warranty periods listed below, Miller will repair or replace any warranted parts or components that fail due to such defects in material or workmanship. Miller must be notified in writing within thirty (30) days of such defect or failure, at which time Miller will provide instructions on the warranty claim procedures to be followed.

Miller shall honor warranty claims on warranted equipment listed below in the event of such a failure within the warranty time periods. All warranty time periods start on the date the equipment was delivered to the original retail purchaser or one year after the equipment is shipped to a European distributor or eighteen months after the equipment is shipped to an International distributor.

1. 5 Years Parts — 3 Years Labor
   * Original main power rectifiers only to include SCRs, diodes, and discrete rectifier modules with exclusion of STR, Si, STi, STH and MPi series.
2. 3 Years — Parts and Labor
   * Engine Driven Welding Generators **(NOTE: Engines are warranted separately by the engine manufacturer.)**
   * Inverter Power Sources (Unless Otherwise Stated)
   * Process Controllers
   * Semi-Automatic and Automatic Wire Feeders
   * Transformer/Rectifier Power Sources
   * Water Coolant System (Integrated)
3. 2 Years — Parts
   * Auto-Darkening Helmet Lenses (No Labor)
   * Migmatic 175
   * HF Units
   * Water Coolant Systems (EU Models, Non-Integrated)
4. 1 Year — Parts and Labor Unless Specified
   * Automatic Motion Devices
   * Field Options (NOTE: Field options are covered under True Blue® for the remaining warranty period of the product they are installed in, or for a minimum of one year — whichever is greater.)
   * Induction Heating Power Sources, Coolers, and Electronic Controls/Recorders
   * Motor Driven Guns (w/exception of Spoolmate Spoolguns)
   * Positioners and Controllers
   * Powered Air Purifying Respirator (PAPR) Blower Unit (No Labor)
   * Racks
   * Running Gear and Trailers
   * Subarc Wire Drive Assemblies
   * Water Coolant Systems (USA Models, Non-Integrated)
   * Work Stations/Weld Tables (No Labor)
5. 6 Months — Parts
   * Batteries
6. 90 Days — Parts
   * Accessory (Kits)
   * Canvas Covers
   * Induction Heating Coils and Blankets
   * MIG Guns
   * Remote Controls
   * Replacement Parts (No Labor)
   * Spoolmate Spoolguns
   * Cables and Non-Electronic Controls

Miller's True Blue® Limited Warranty shall not apply to:

1. **Consumable components; such as contact tips, cutting nozzles, contactors, brushes, switches, slip rings, relays or parts that fail due to normal wear.**
2. Items furnished by Miller, but manufactured by others, such as engines or trade accessories. These items are covered by the manufacturer's warranty, if any.
3. Equipment that has been modified by any party other than Miller, or equipment that has been improperly installed, improperly operated or misused based upon industry standards, or equipment which has not had reasonable and necessary maintenance, or equipment which has been used for operation outside of the specifications for the equipment.

MILLER PRODUCTS ARE INTENDED FOR PURCHASE AND USE BY COMMERCIAL/INDUSTRIAL USERS AND PERSONS TRAINED AND EXPERIENCED IN THE USE AND MAINTENANCE OF WELDING EQUIPMENT.

In the event of a warranty claim covered by this warranty, the exclusive remedies shall be, at Miller's option: (1) repair; or (2) replacement; or, where authorized in writing by Miller in appropriate cases, (3) the reasonable cost of repair or replacement at an authorized Miller service station; or (4) payment of or credit for the purchase price (less reasonable depreciation based upon actual use) upon return of the goods at customer's risk and expense. Miller's option of repair or replacement will be F.O.B., Factory at ITW Welding Products Group Europe or F.O.B. at a Miller authorized service facility as determined by Miller. Therefore no compensation or reimbursement for transportation costs of any kind will be allowed.

TO THE EXTENT PERMITTED BY LAW, THE REMEDIES PROVIDED HEREIN ARE THE SOLE AND EXCLUSIVE REMEDIES. IN NO EVENT SHALL MILLER BE LIABLE FOR DIRECT, INDIRECT, SPECIAL, INCIDENTAL OR CONSEQUENTIAL DAMAGES (INCLUDING LOSS OF PROFIT), WHETHER BASED ON CONTRACT, TORT OR ANY OTHER LEGAL THEORY.

ANY EXPRESS WARRANTY NOT PROVIDED HEREIN AND ANY IMPLIED WARRANTY, GUARANTY OR REPRESENTATION AS TO PERFORMANCE, AND ANY REMEDY FOR BREACH OF CONTRACT TORT OR ANY OTHER LEGAL THEORY WHICH, BUT FOR THIS PROVISION, MIGHT ARISE BY IMPLICATION, OPERATION OF LAW, CUSTOM OF TRADE OR COURSE OF DEALING, INCLUDING ANY IMPLIED WARRANTY OF MERCHANTABILITY OR FITNESS FOR PARTICULAR PURPOSE, WITH RESPECT TO ANY AND ALL EQUIPMENT FURNISHED BY MILLER IS EXCLUDED AND DISCLAIMED BY MILLER.

Miller®

Owner's Record

Please complete and retain with your personal records.

Model Name Serial/Style Number

Purchase Date (Date which equipment was delivered to original customer.)

Distributor

Address

Country Zip/Postal Code

For Service

Contact a DISTRIBUTOR or SERVICE AGENCY near you.

Always provide Model Name and Serial/Style Number.

Contact your Distributor for:

- Welding Supplies and Consumables
- Options and Accessories
- Service and Repair
- Replacement Parts
- Owner's Manuals

Contact the Delivering Carrier to:

File a claim for loss or damage during shipment.

For assistance in filing or settling claims, contact your distributor and/or equipment manufacturer's Transportation Department.

ITW Welding Italy S.r.l.
Via Privata Iseo, 6/E
20098 San Giuliano
Milanese, Italy
Phone: 39 (0) 2982901
Fax: 39 (0) 298290-203
email: miller@itw−welding.it

ORIGINAL INSTRUCTIONS − PRINTED IN USA

© 2013 Miller Electric Mfg. Co. 2013−01